CASINGS

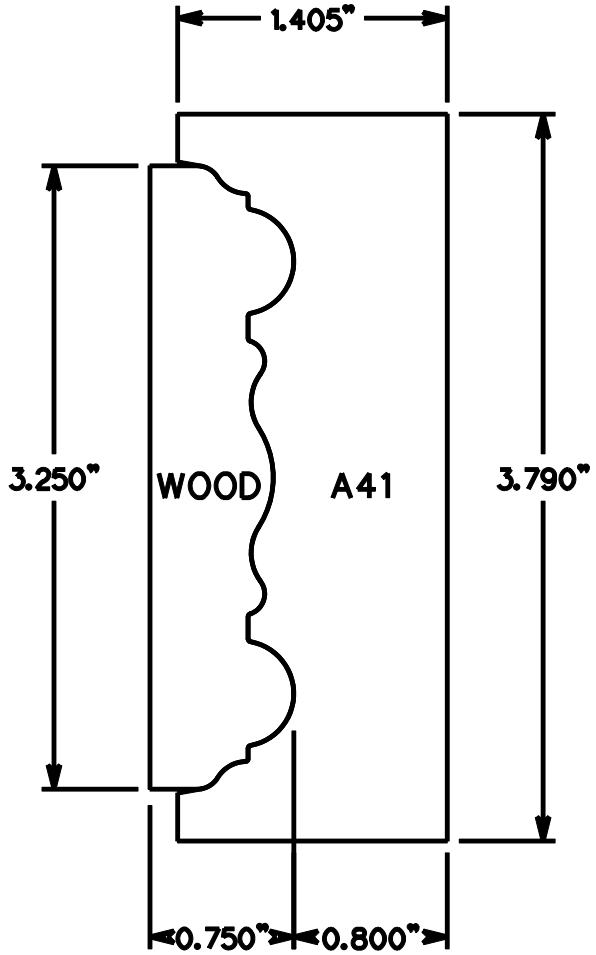

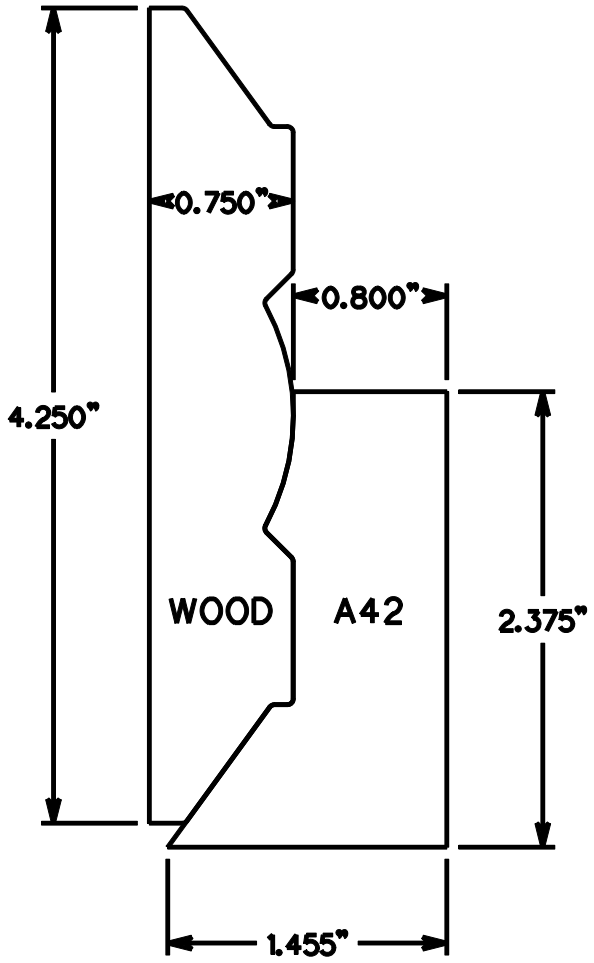

©2011 WWW.MOLDINGKNIVES.COM

CASINGS

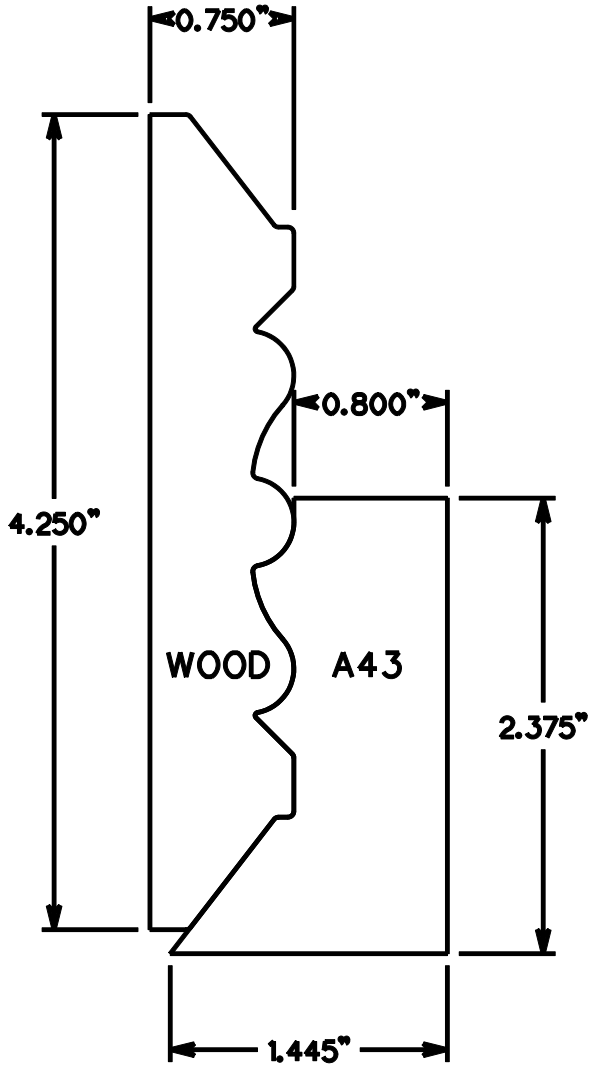

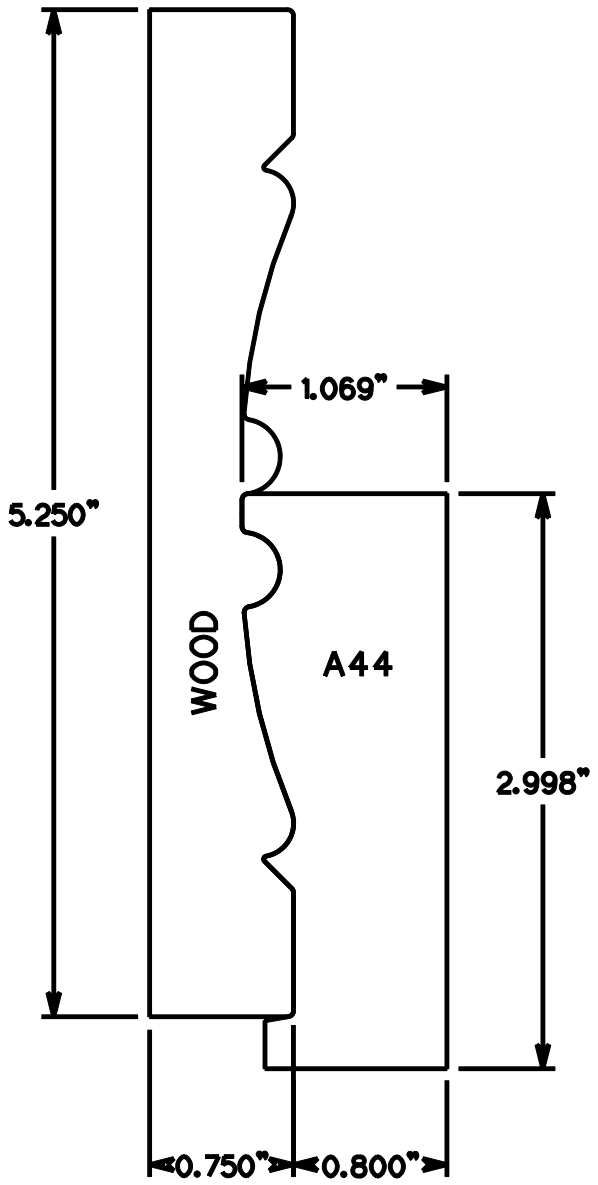

©2011 WWW.MOLDINGKNIVES.COM

CASINGS

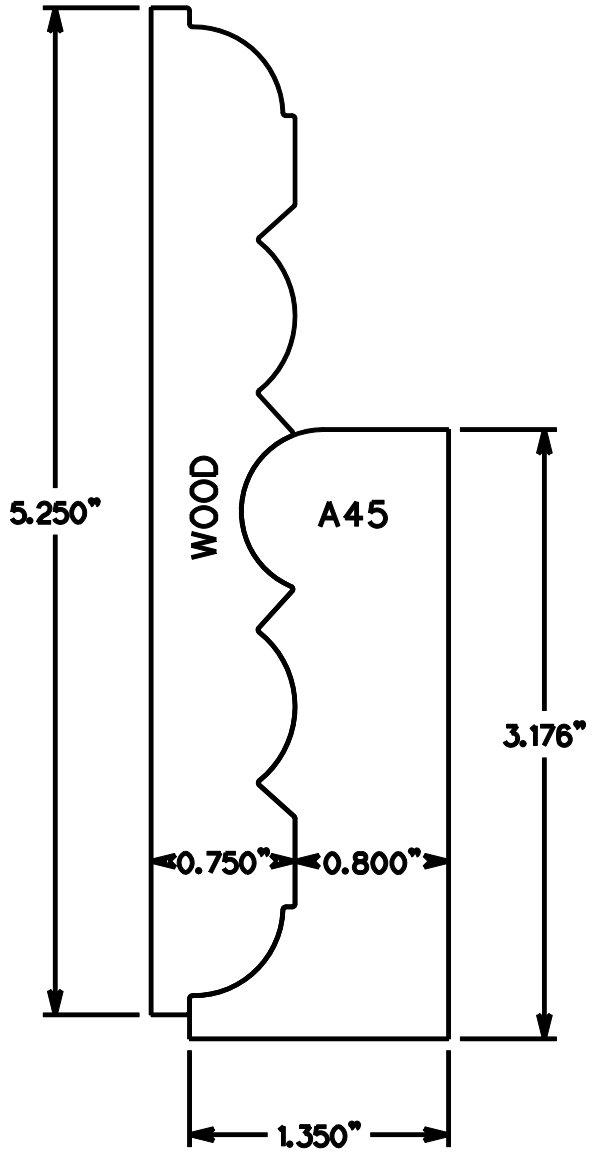

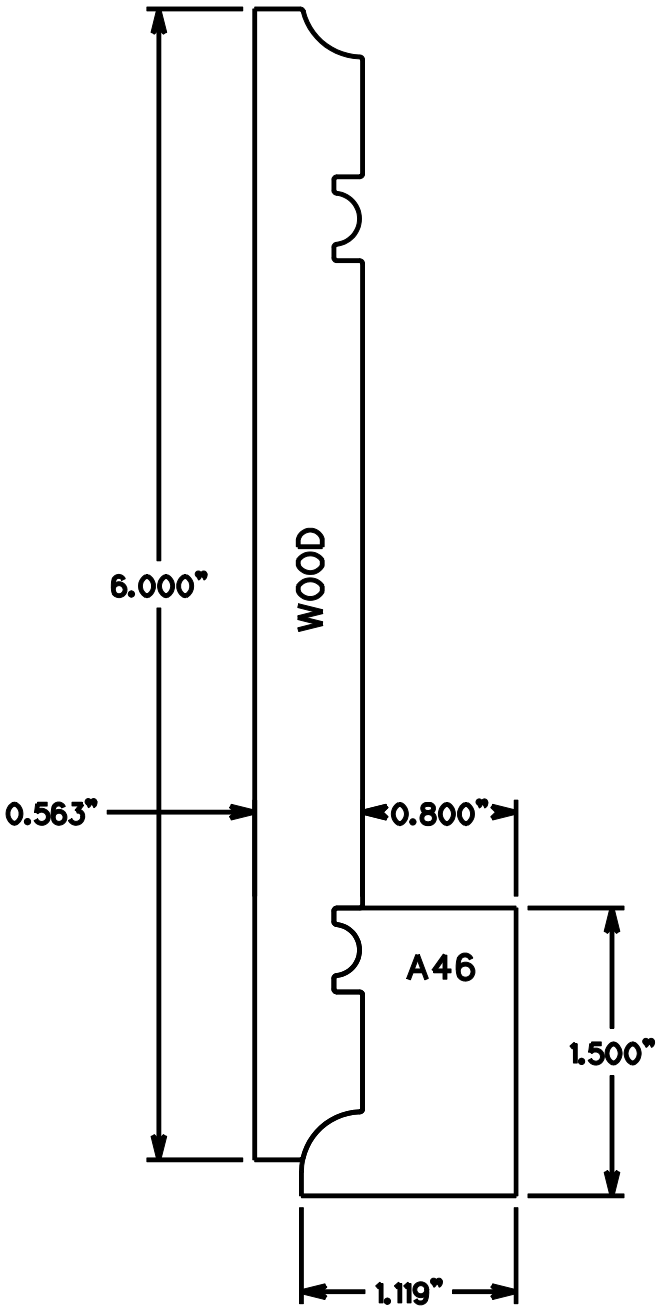

©2011 WWW.MOLDINGKNIVES.COM

CASINGS

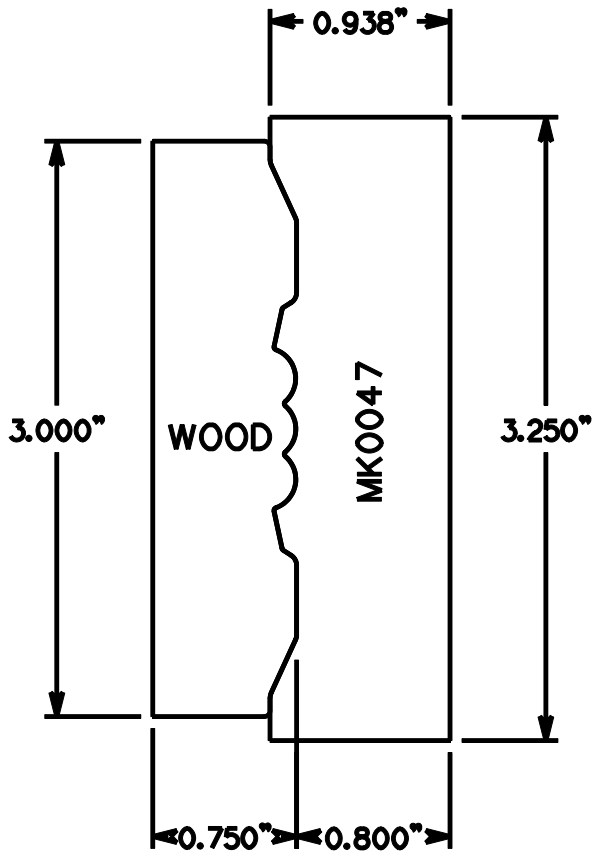

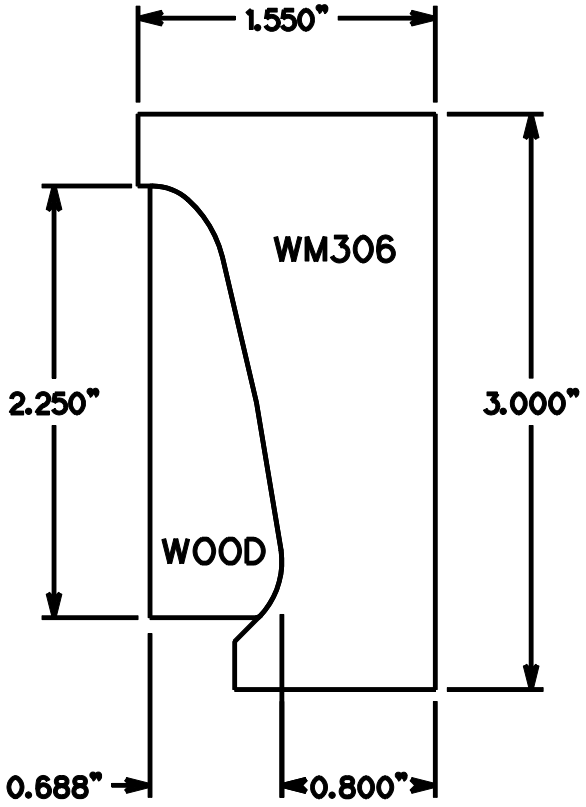

©2011 WWW.MOLDINGKNIVES.COM

CASINGS

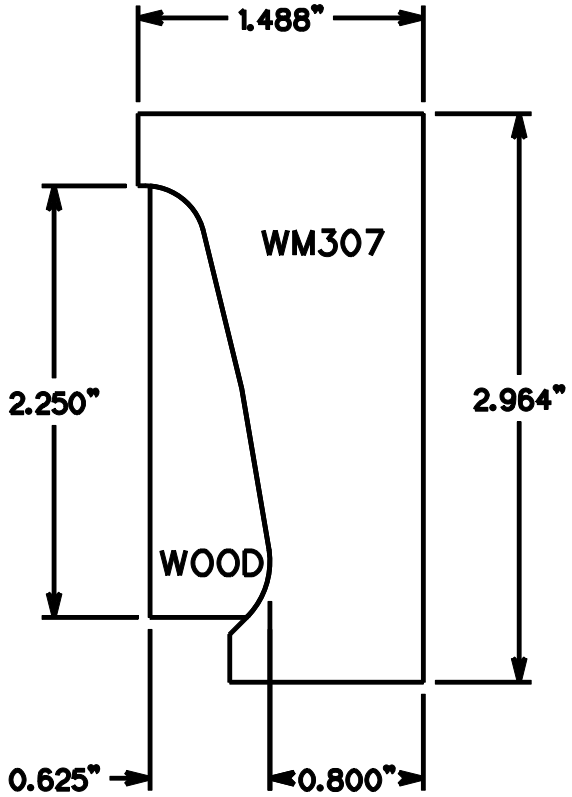

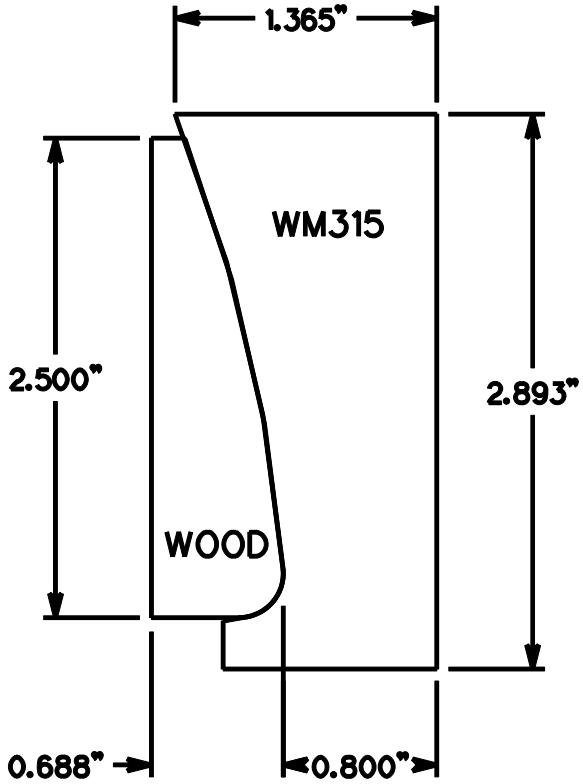

©2011 WWW.MOLDINGKNIVES.COM

CASINGS

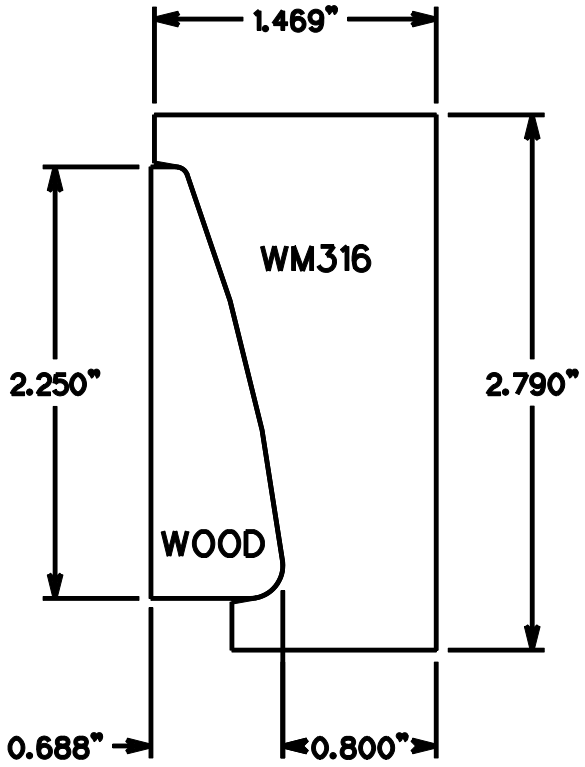

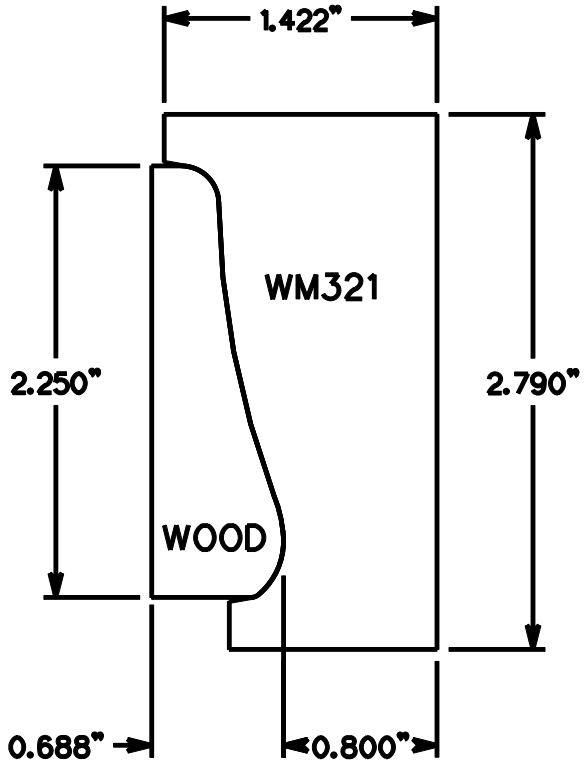

©2011 WWW.MOLDINGKNIVES.COM

CASINGS

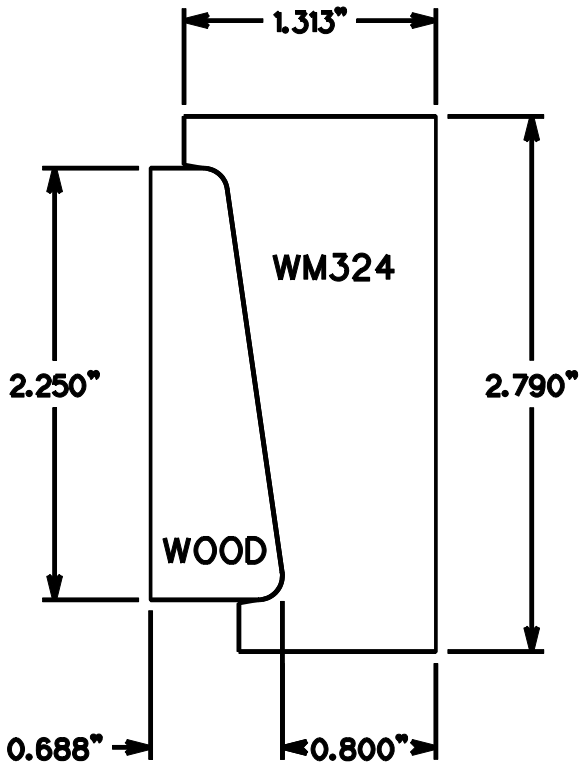

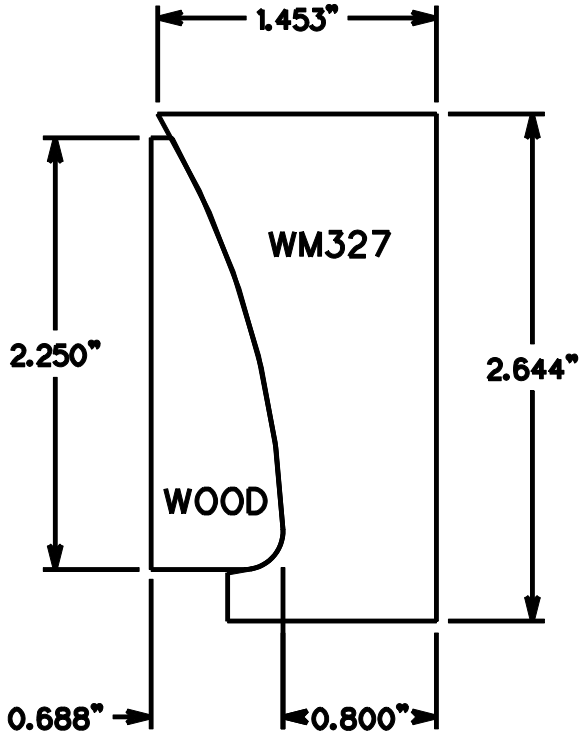

©2011 WWW.MOLDINGKNIVES.COM

CASINGS

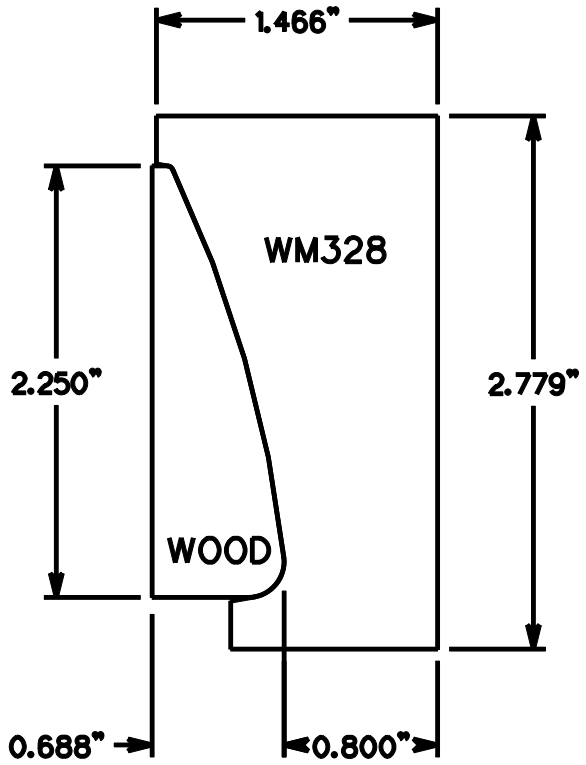

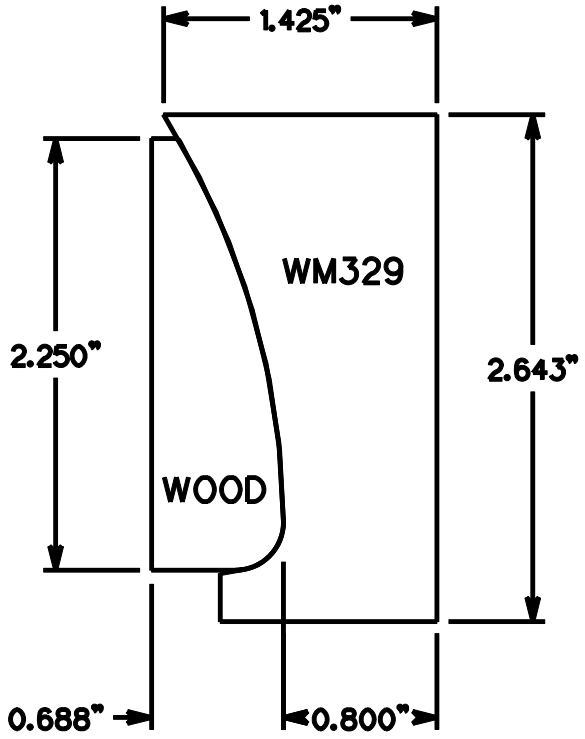

©2011 WWW.MOLDINGKNIVES.COM

CASINGS

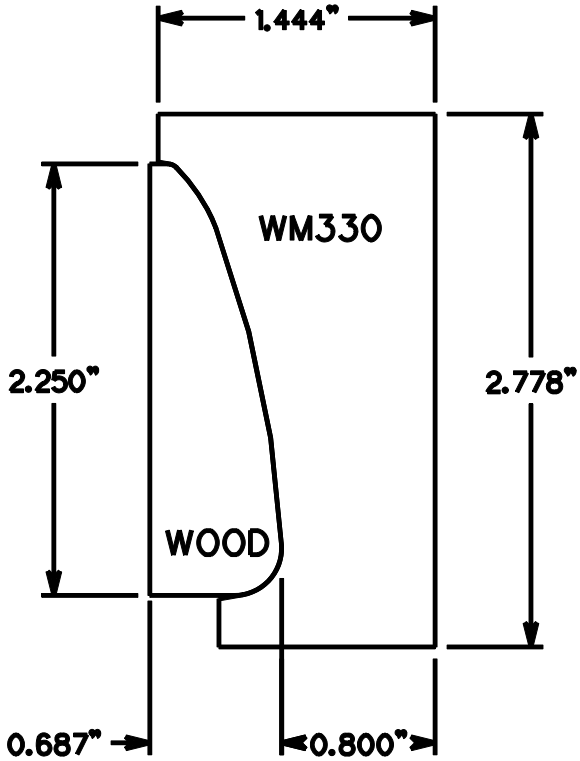

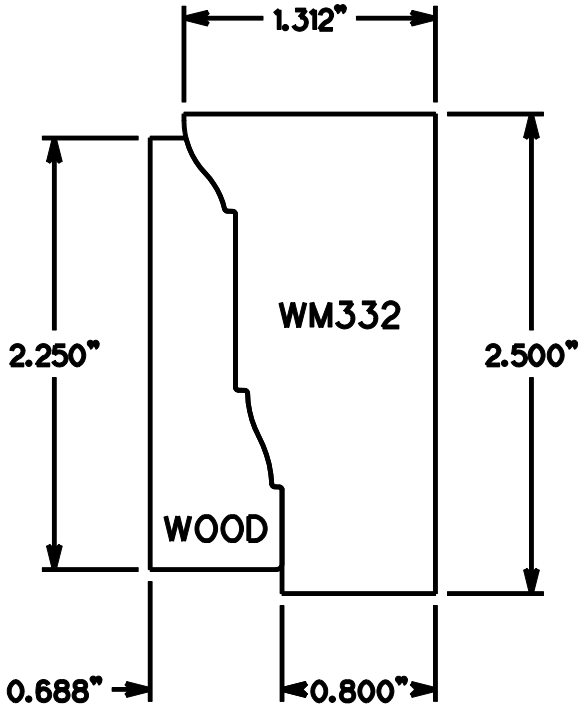

©2011 WWW.MOLDINGKNIVES.COM

CASINGS

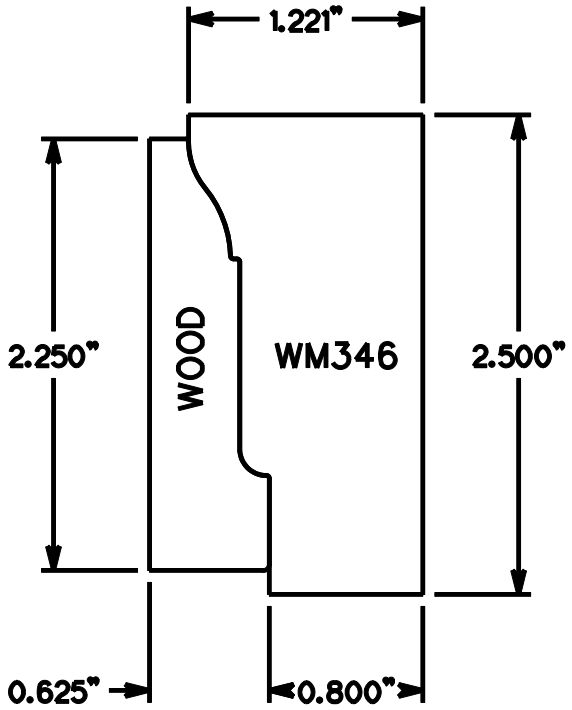

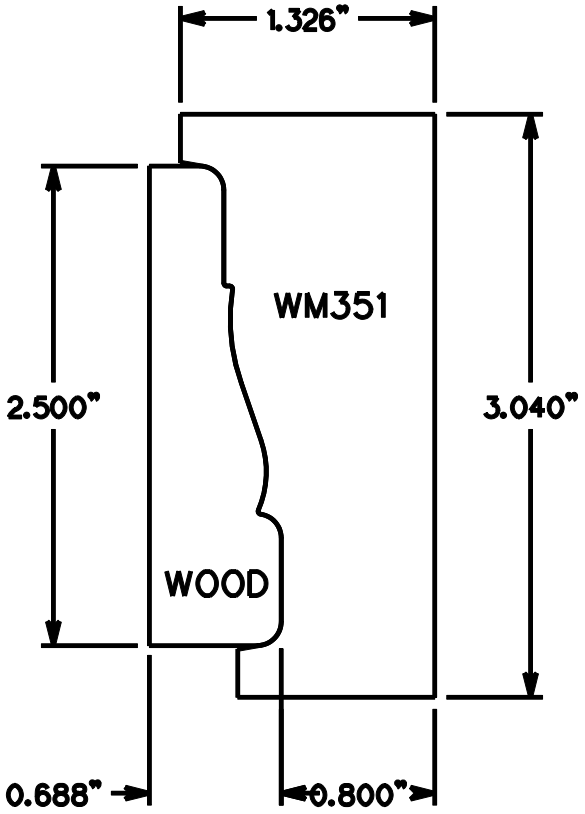

©2011 WWW.MOLDINGKNIVES.COM

CASINGS

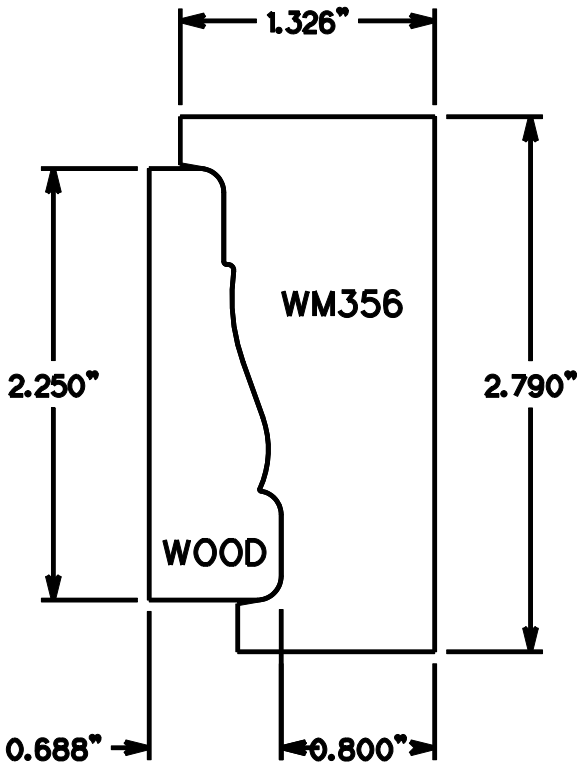

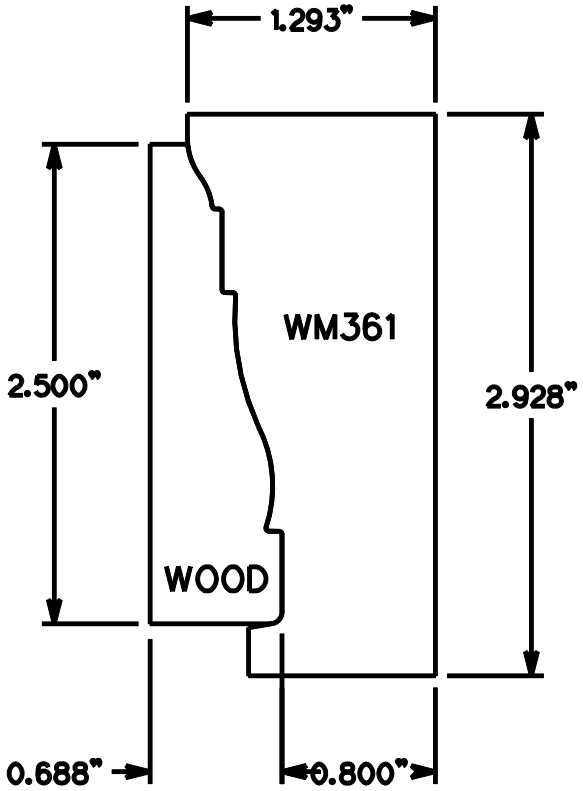

©2011 WWW.MOLDINGKNIVES.COM

CASINGS

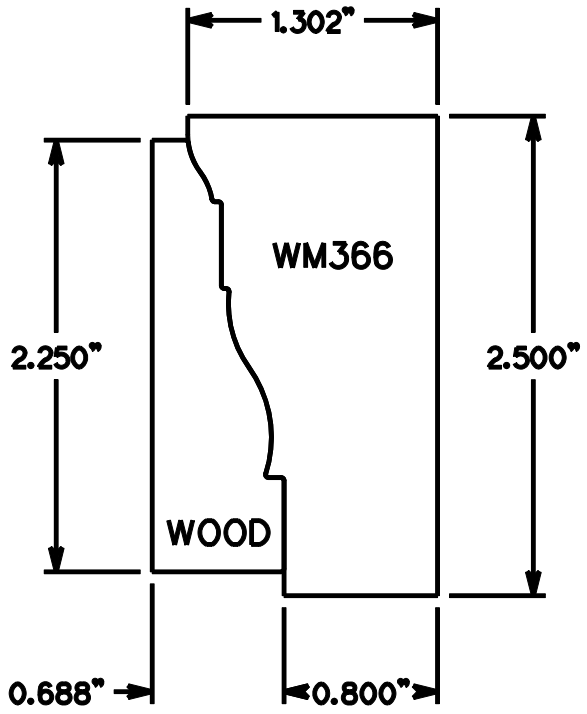

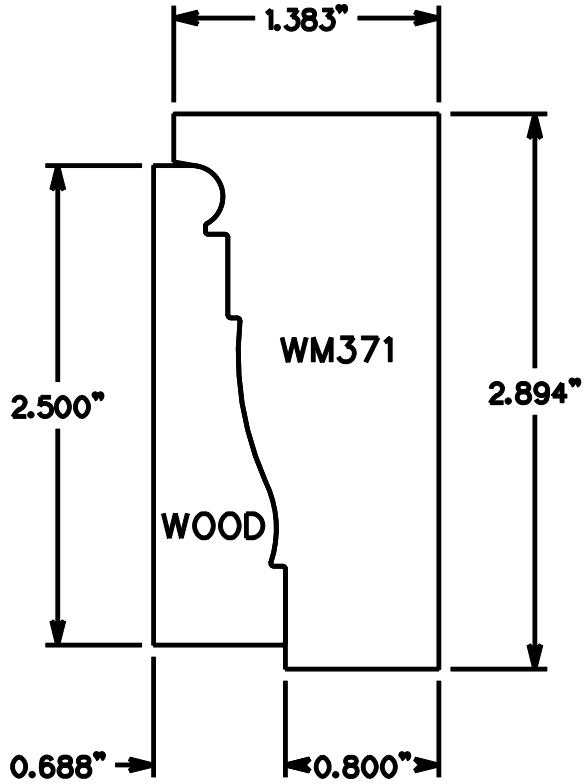

©2011 WWW.MOLDINGKNIVES.COM

CASINGS

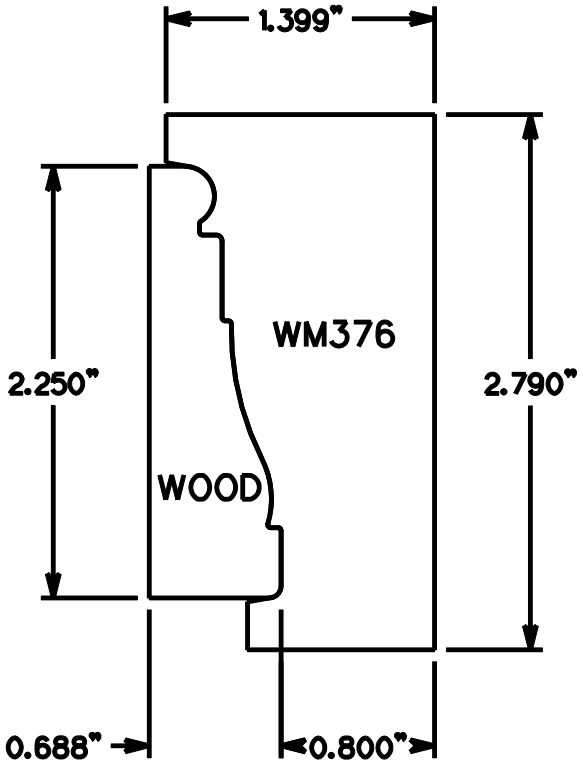

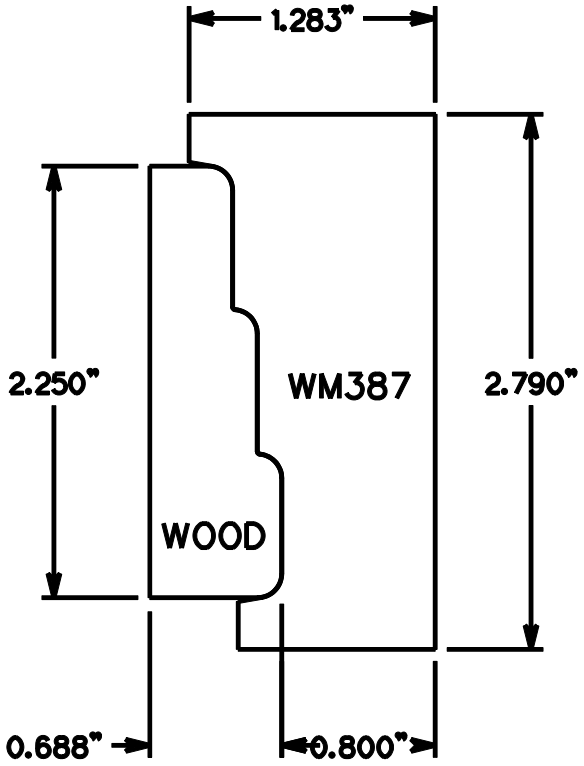

©2011 WWW.MOLDINGKNIVES.COM

CASINGS

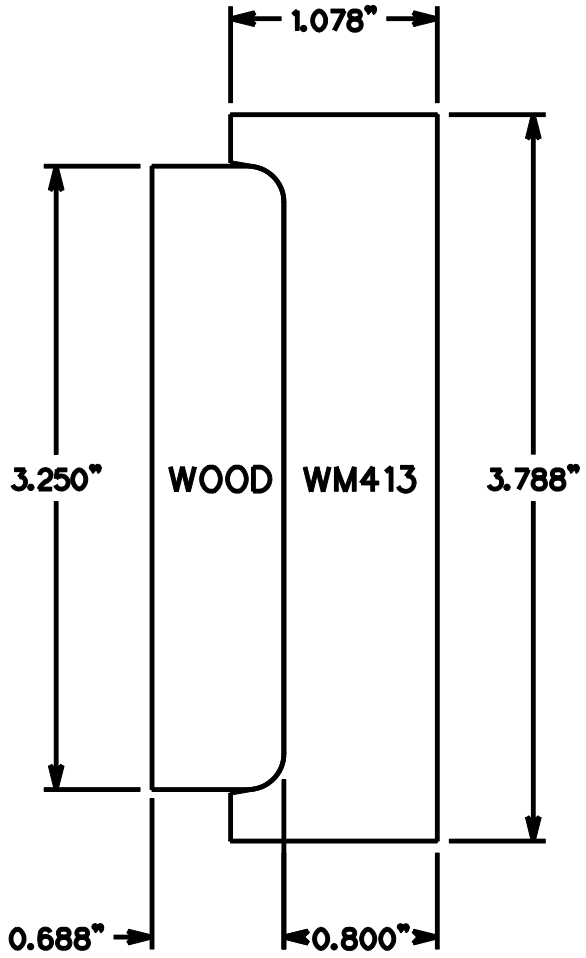

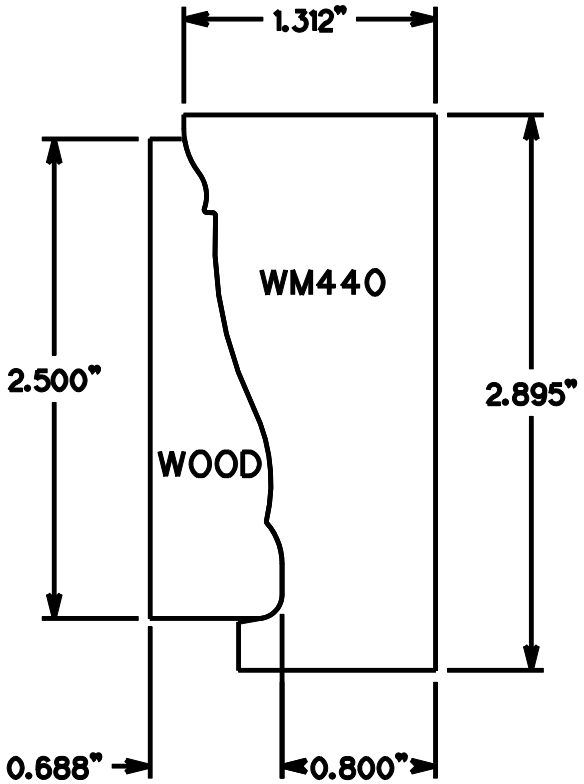

©2011 WWW.MOLDINGKNIVES.COM

CASINGS

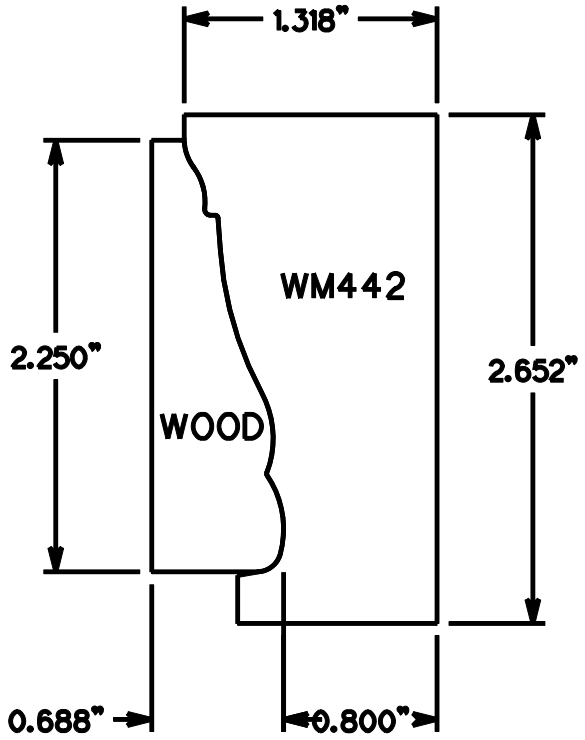

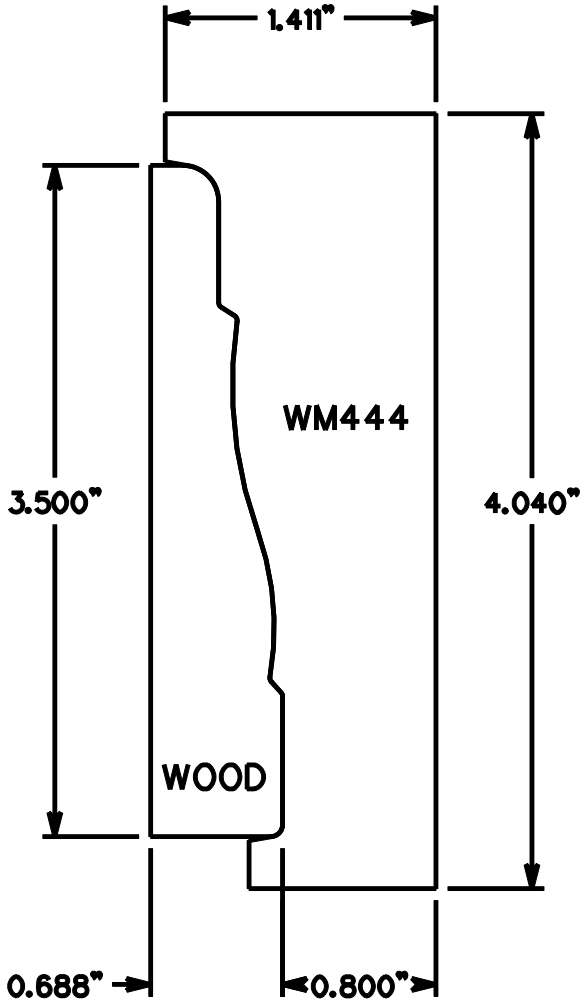

©2011 WWW.MOLDINGKNIVES.COM

CASINGS

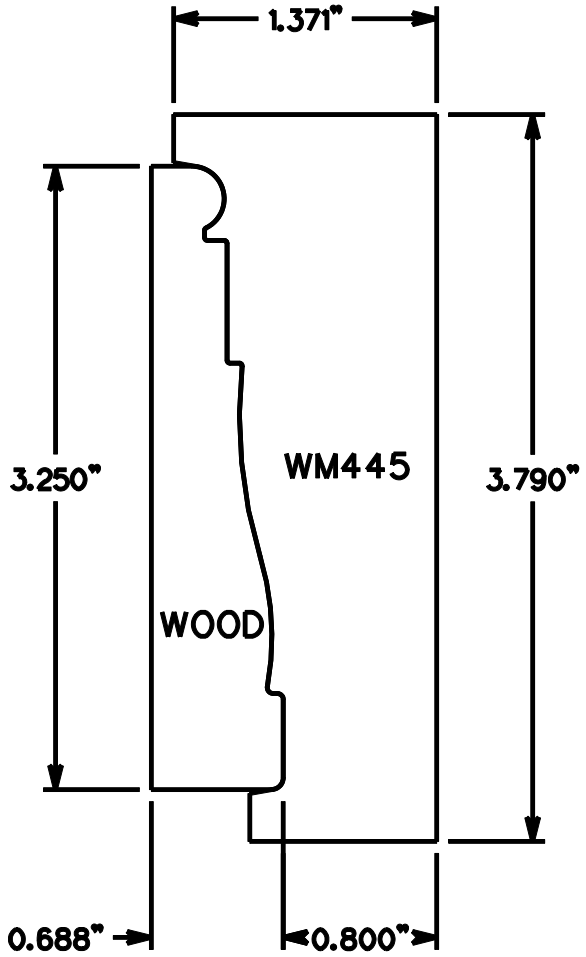

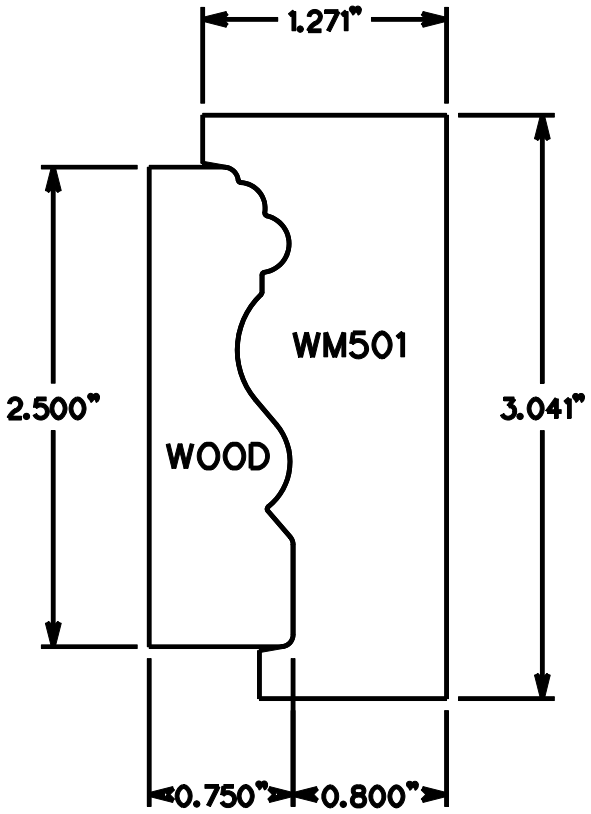

©2011 WWW.MOLDINGKNIVES.COM

CASINGS

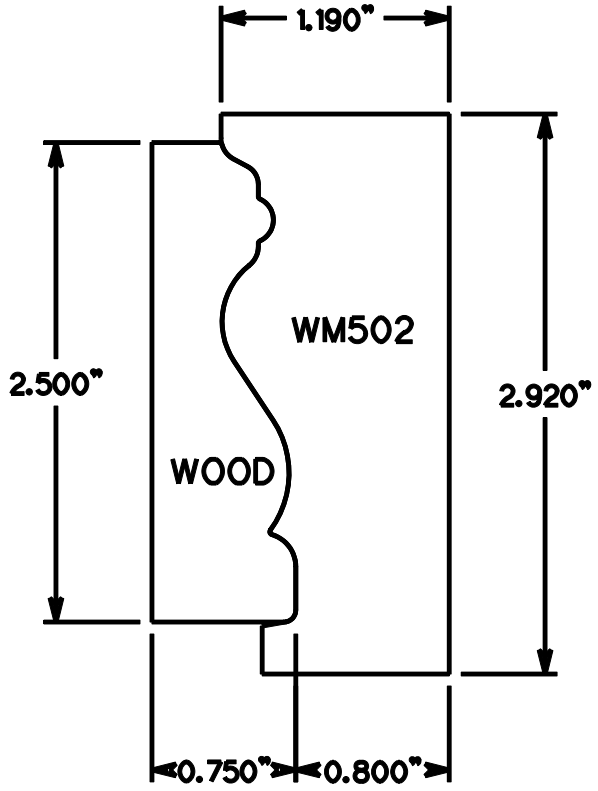

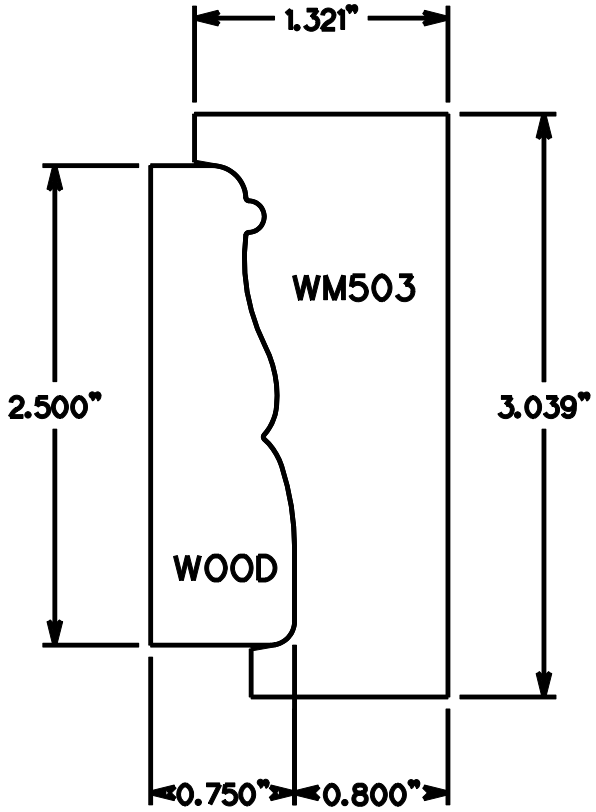

©2011 WWW.MOLDINGKNIVES.COM

CASINGS

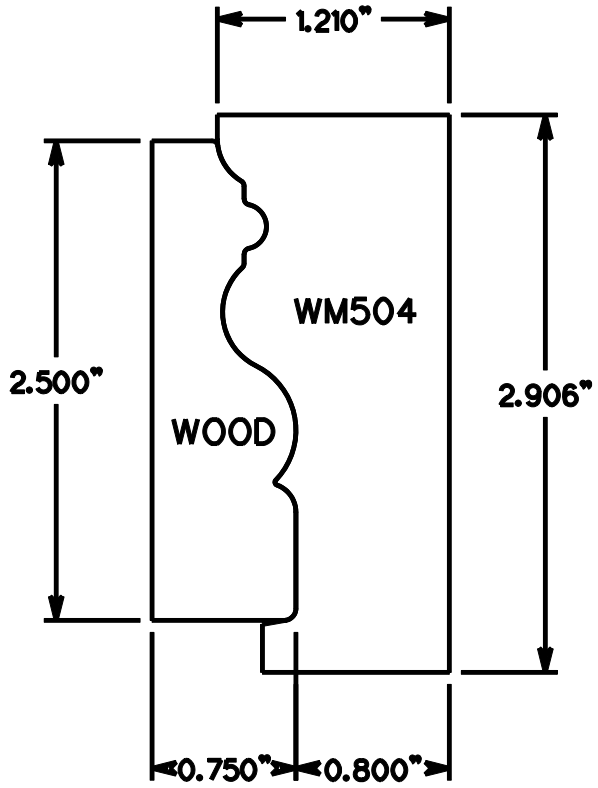

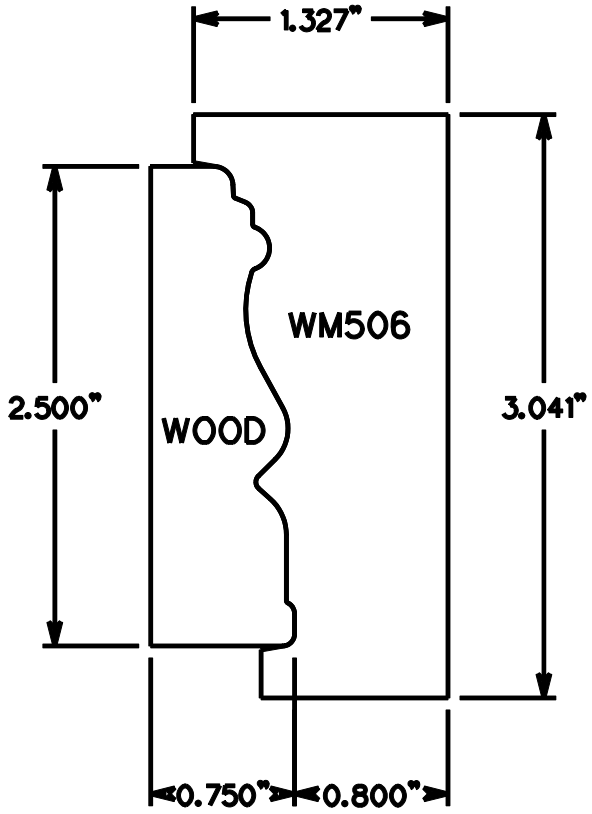

©2011 WWW.MOLDINGKNIVES.COM

CASINGS

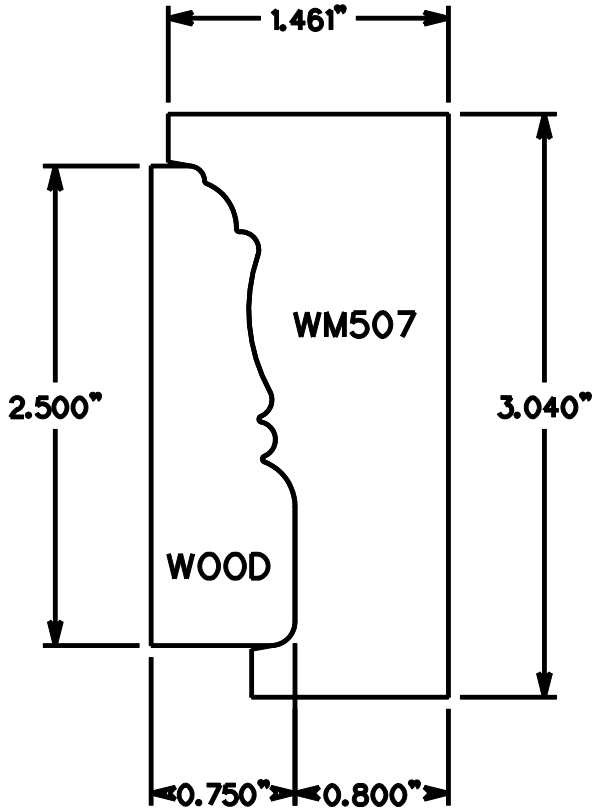

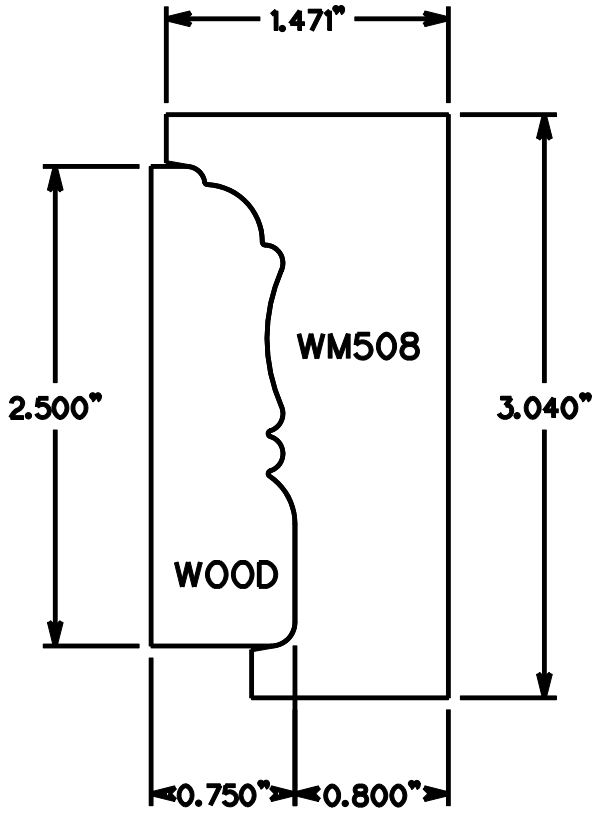

©2011 WWW.MOLDINGKNIVES.COM

CASINGS

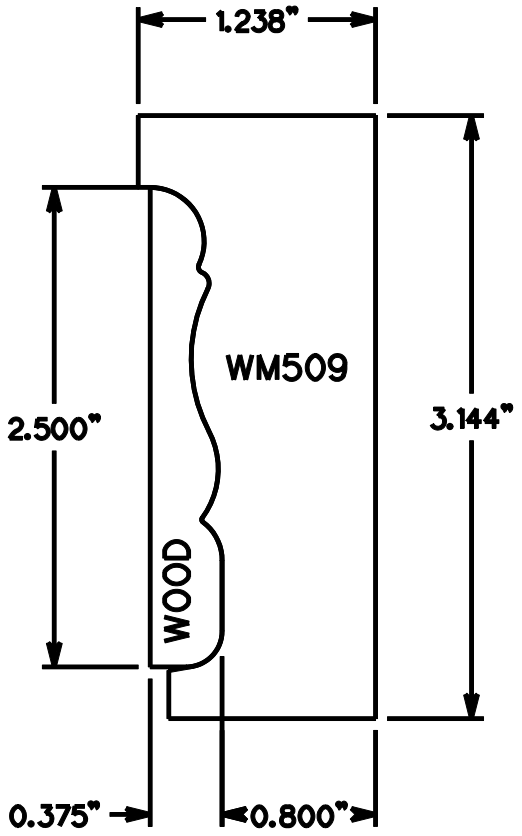

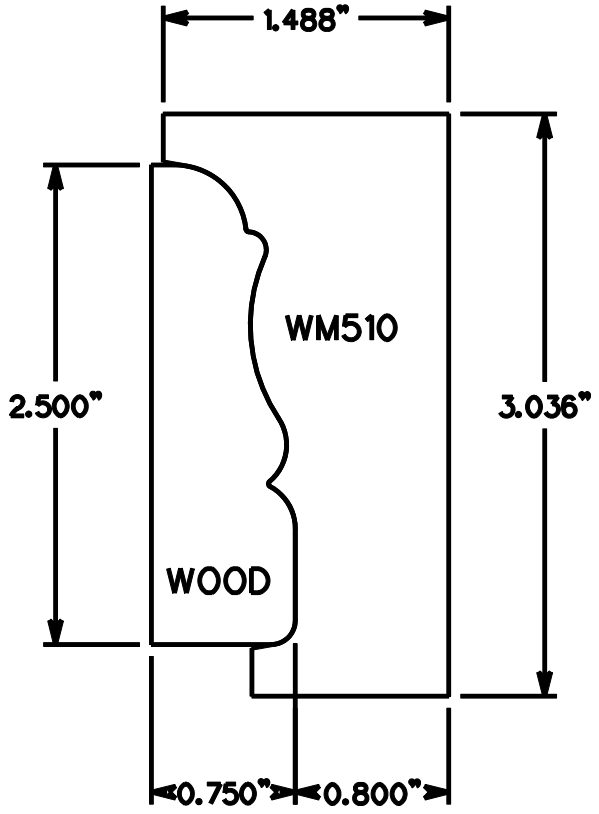

©2011 WWW.MOLDINGKNIVES.COM

CASINGS

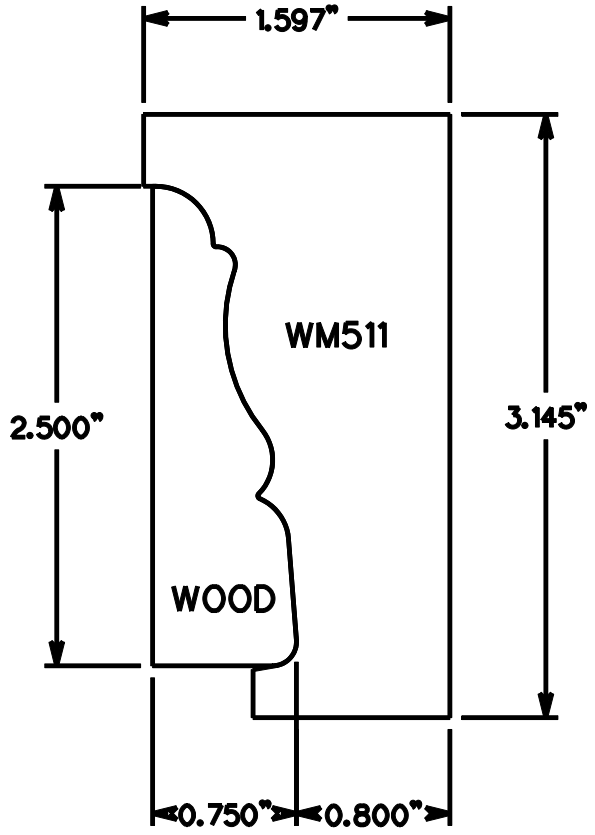

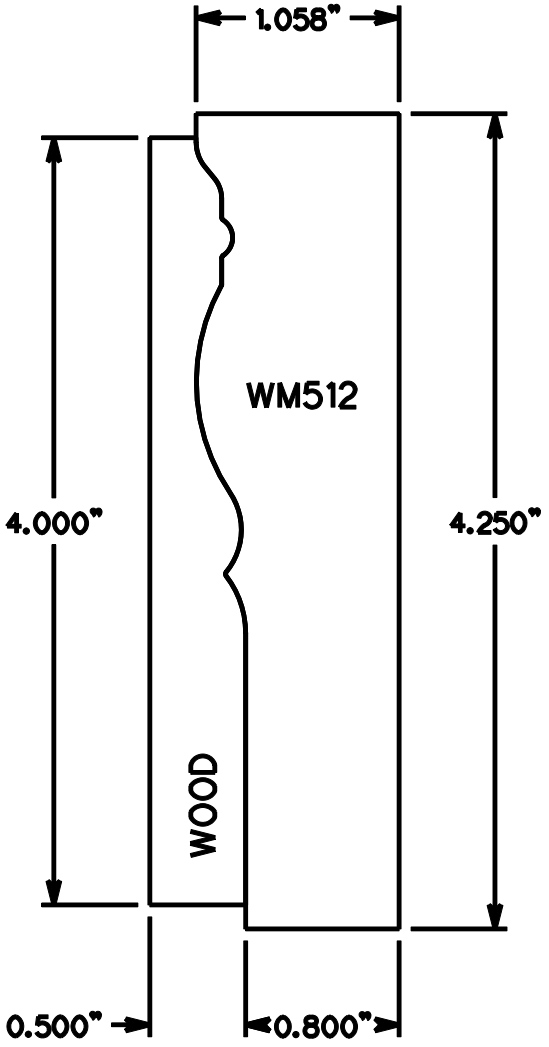

©2011 WWW.MOLDINGKNIVES.COM

CASINGS

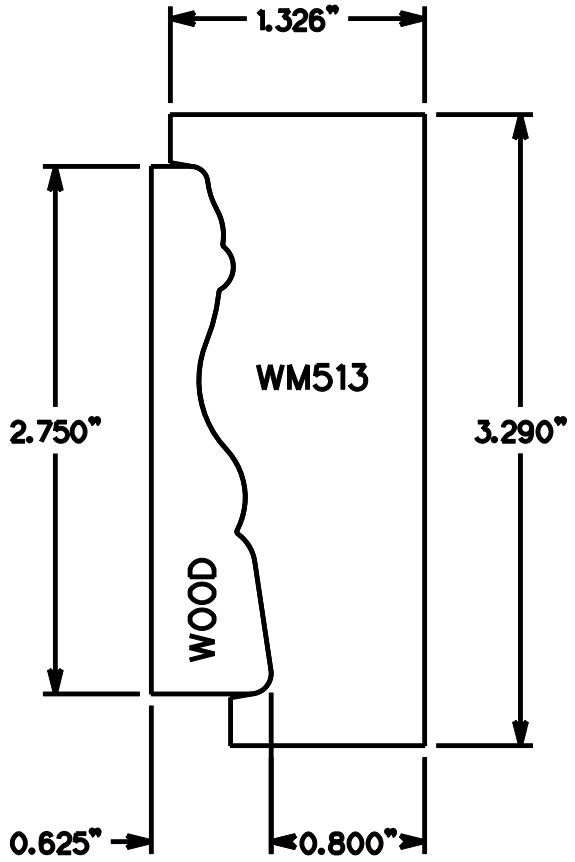

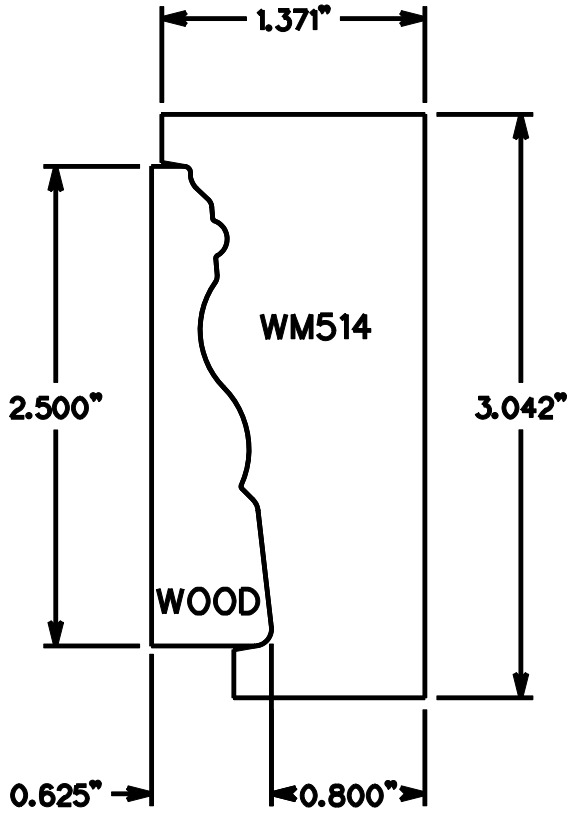

©2011 WWW.MOLDINGKNIVES.COM

CASINGS

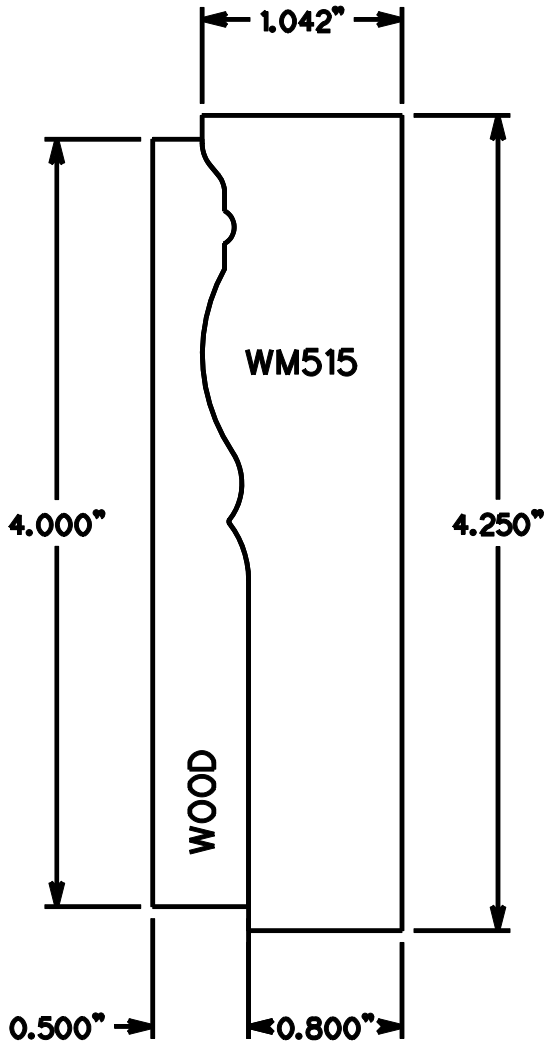

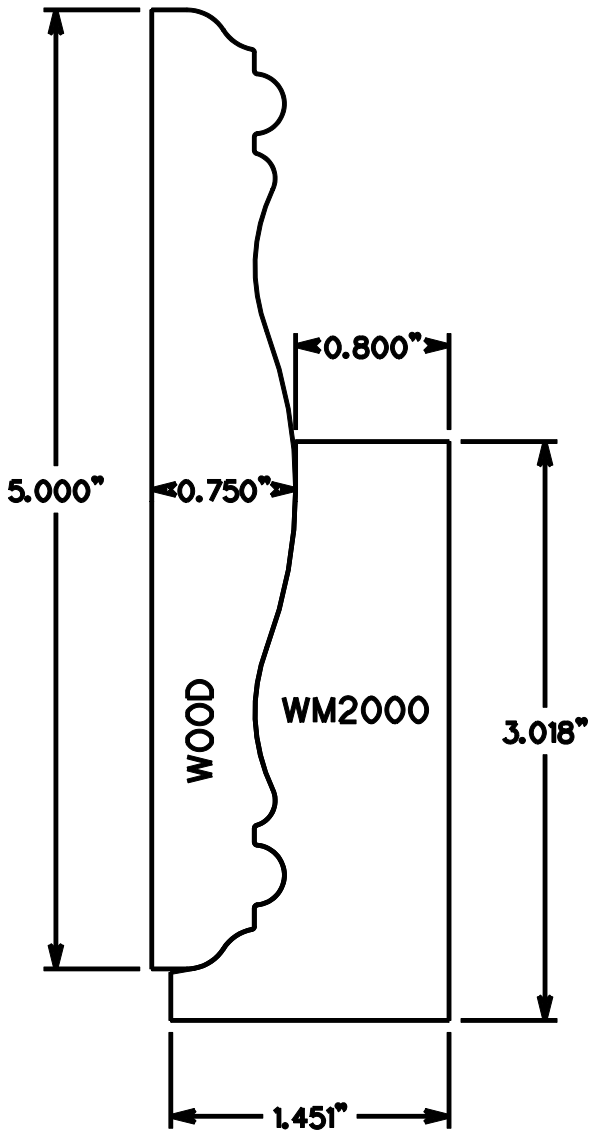

©2011 WWW.MOLDINGKNIVES.COM

CASINGS

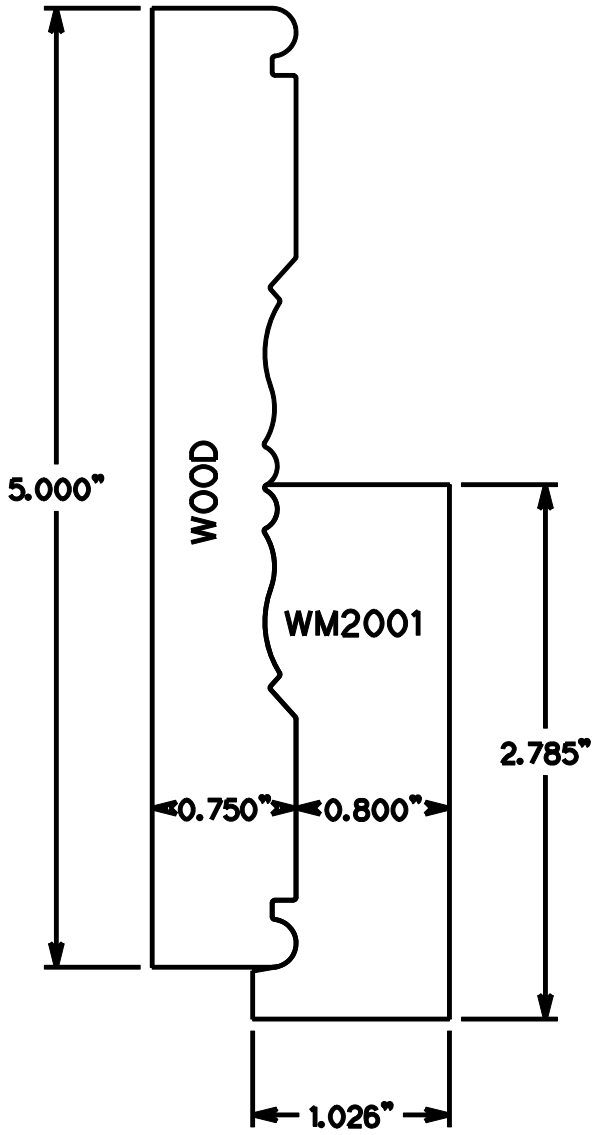

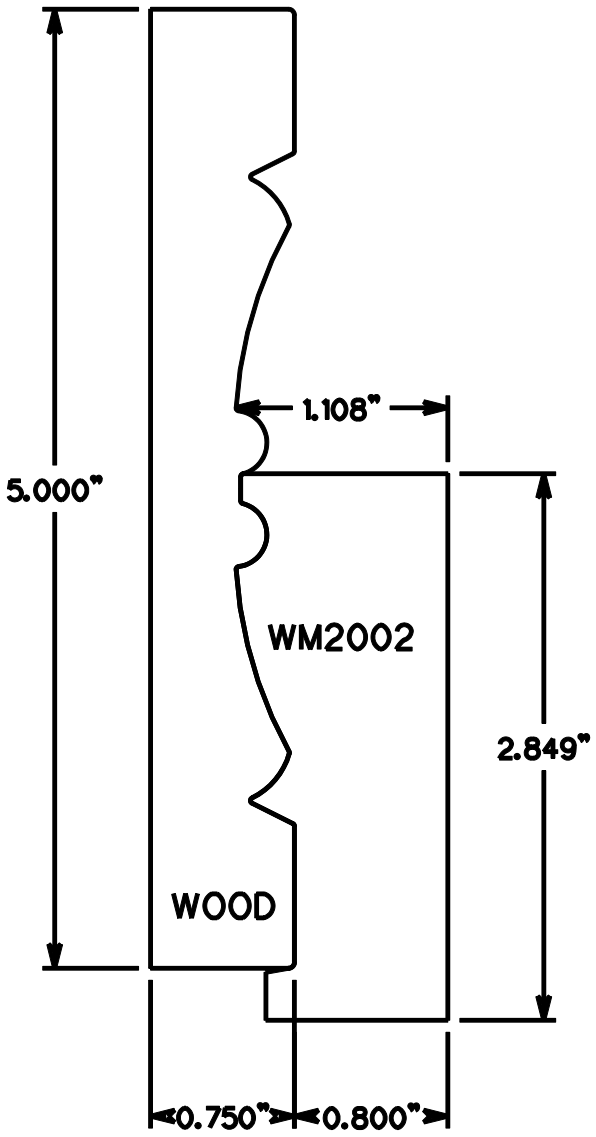

©2011 WWW.MOLDINGKNIVES.COM

CASINGS

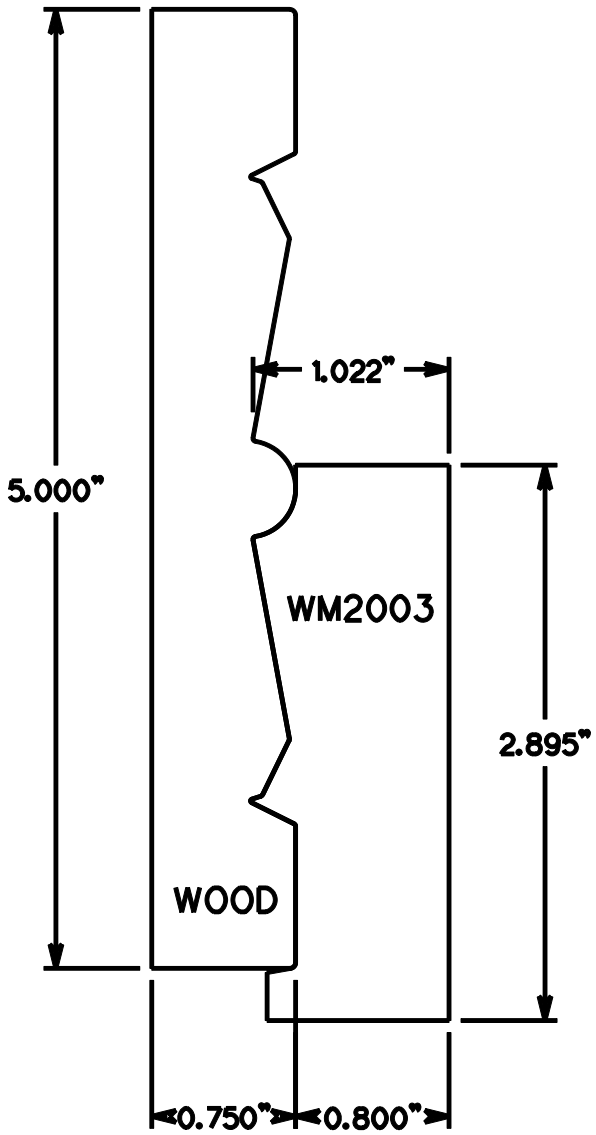

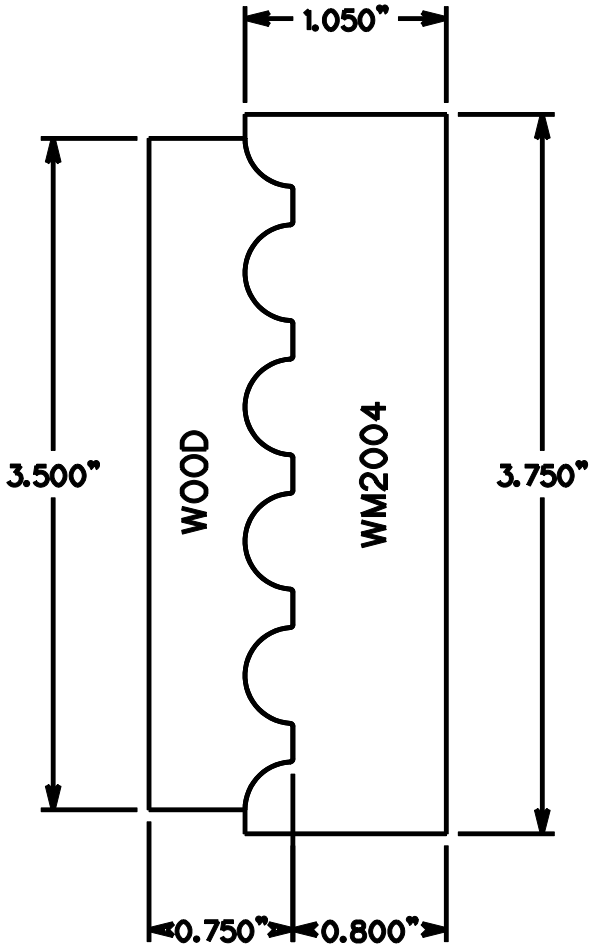

©2011 WWW.MOLDINGKNIVES.COM

CASINGS

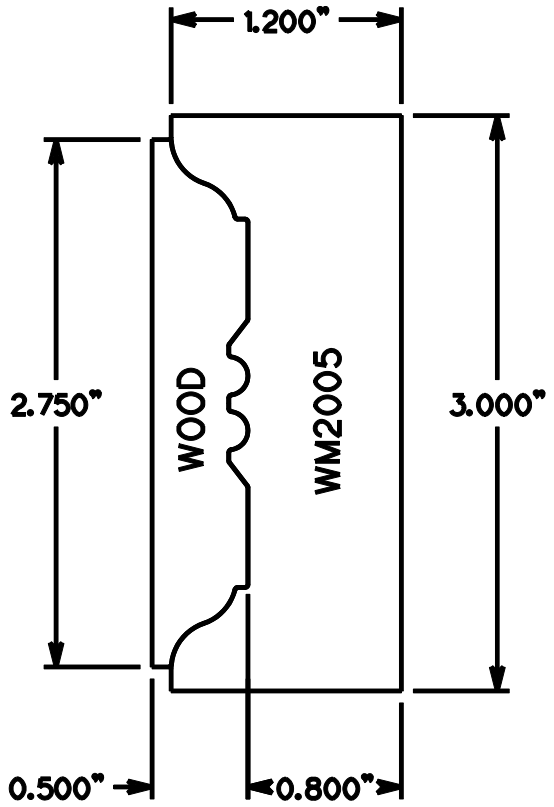

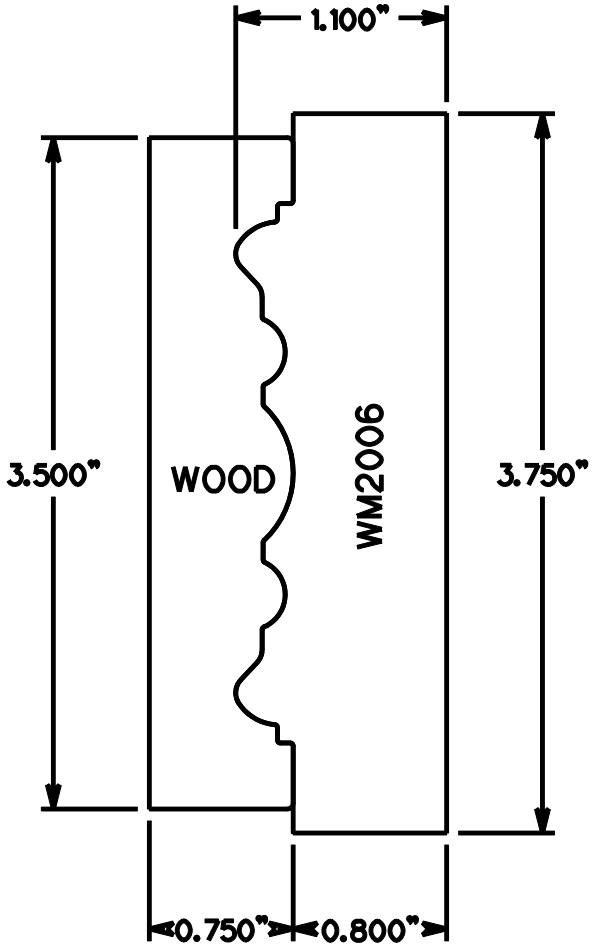

©2011 WWW.MOLDINGKNIVES.COM

CASINGS

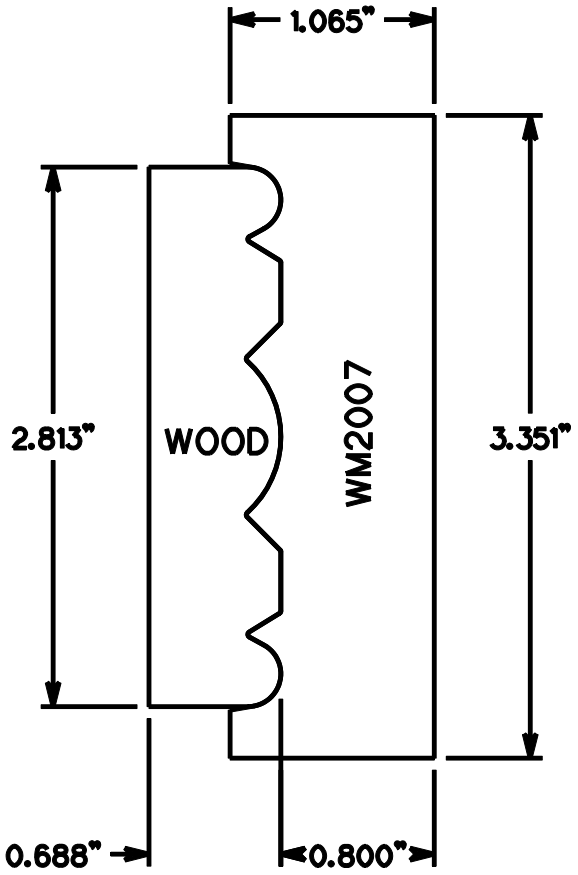

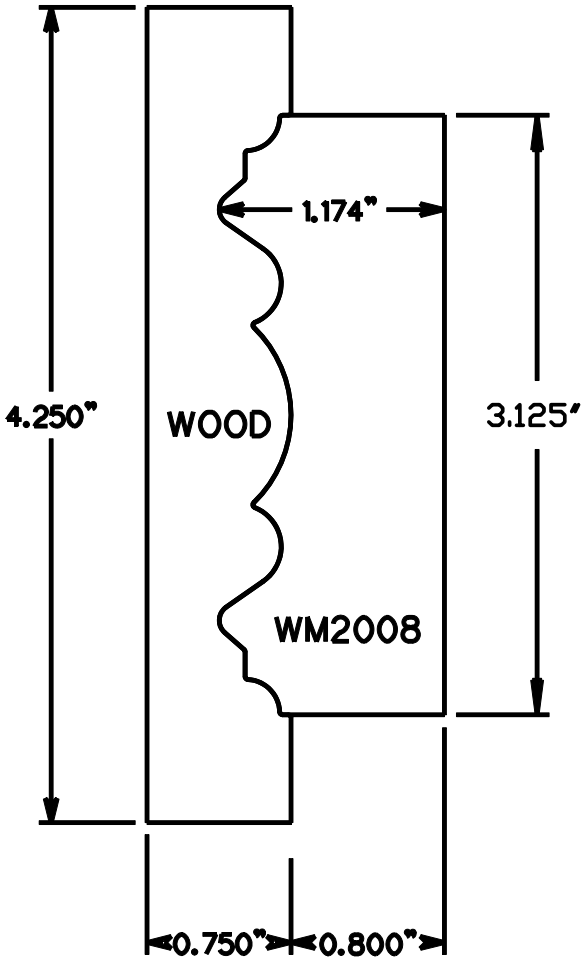

©2011 WWW.MOLDINGKNIVES.COM

CASINGS

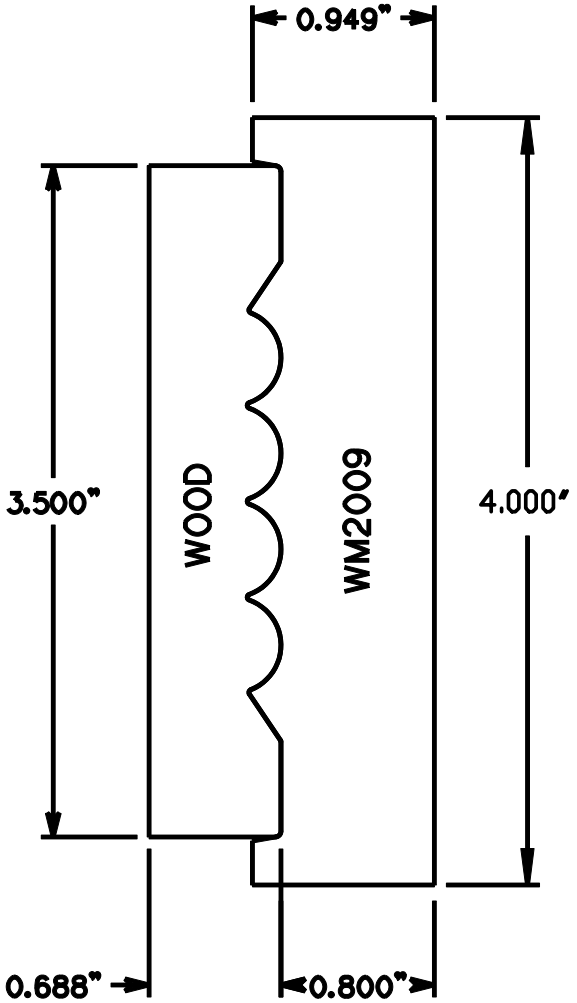

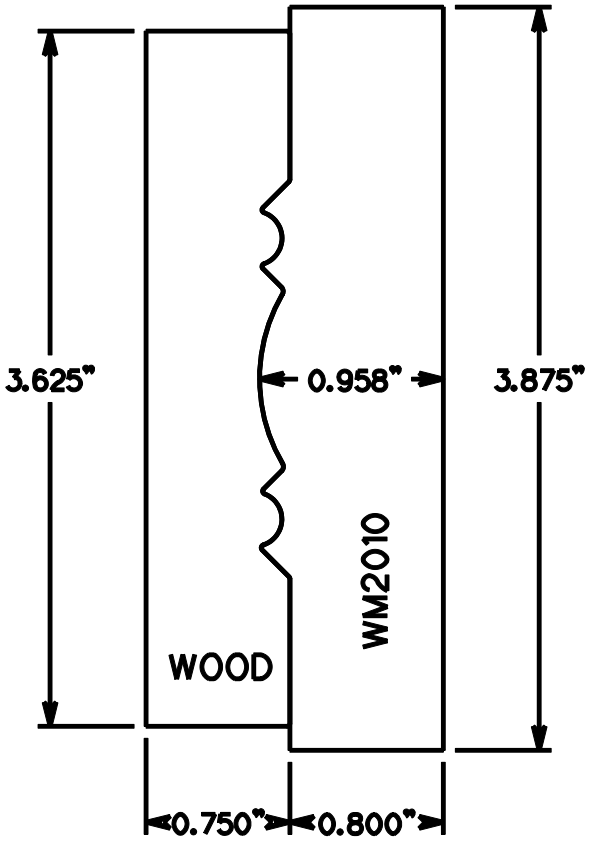

©2011 WWW.MOLDINGKNIVES.COM

CASINGS

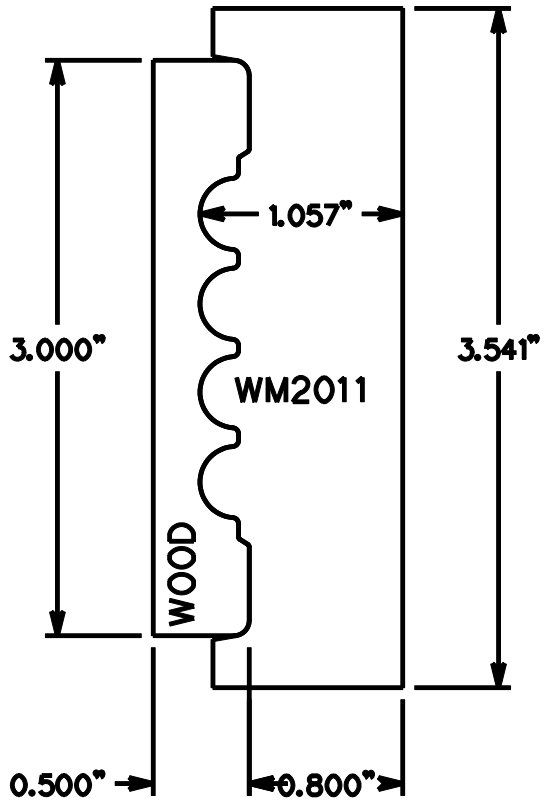

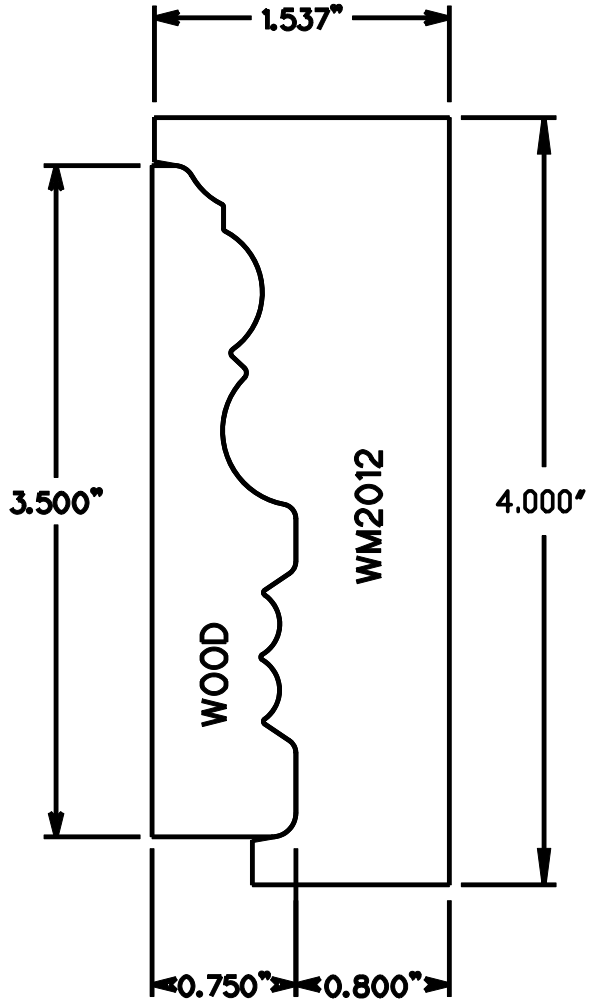

©2011 WWW.MOLDINGKNIVES.COM

CASINGS

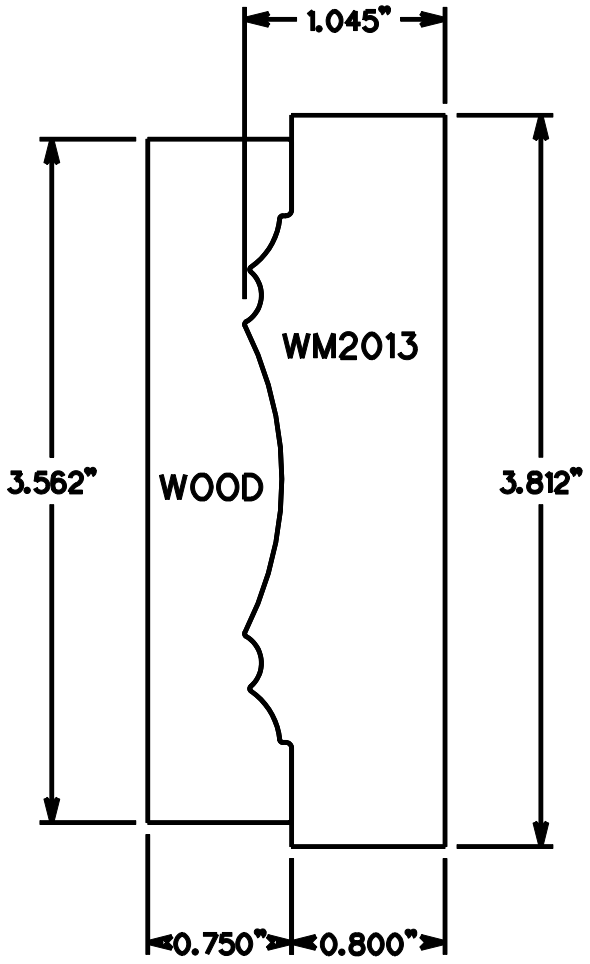

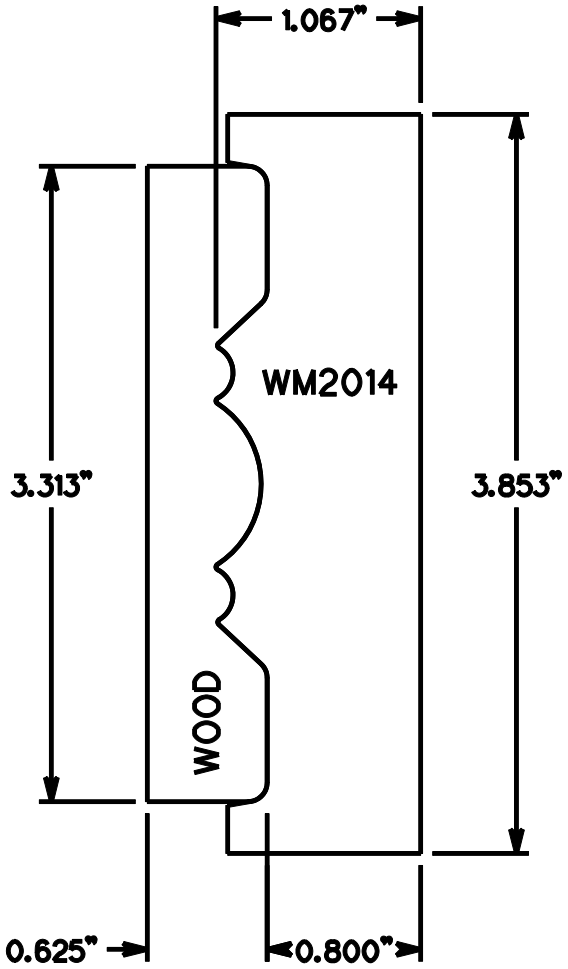

©2011 WWW.MOLDINGKNIVES.COM

CASINGS

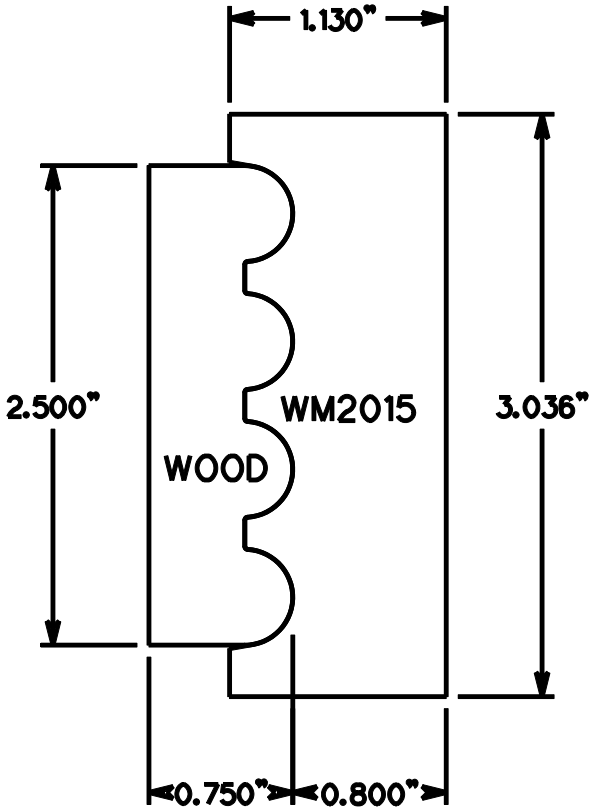

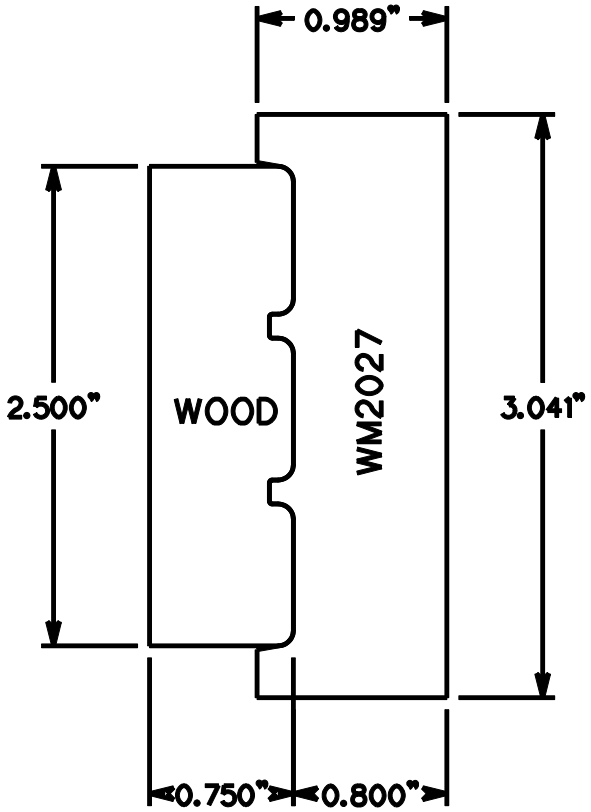

©2011 WWW.MOLDINGKNIVES.COM

CASINGS

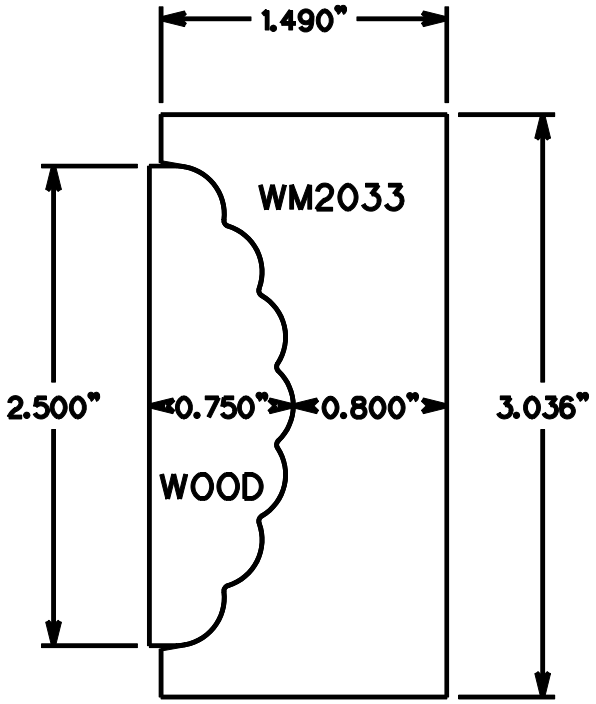

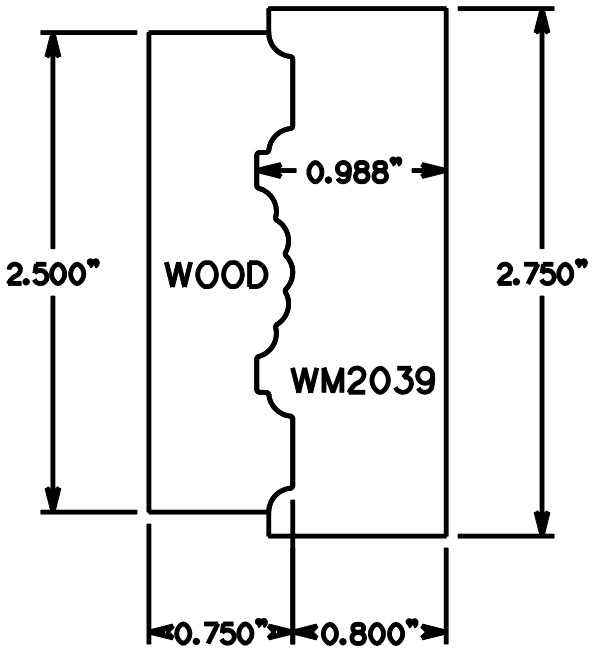

©2011 WWW.MOLDINGKNIVES.COM

CASINGS

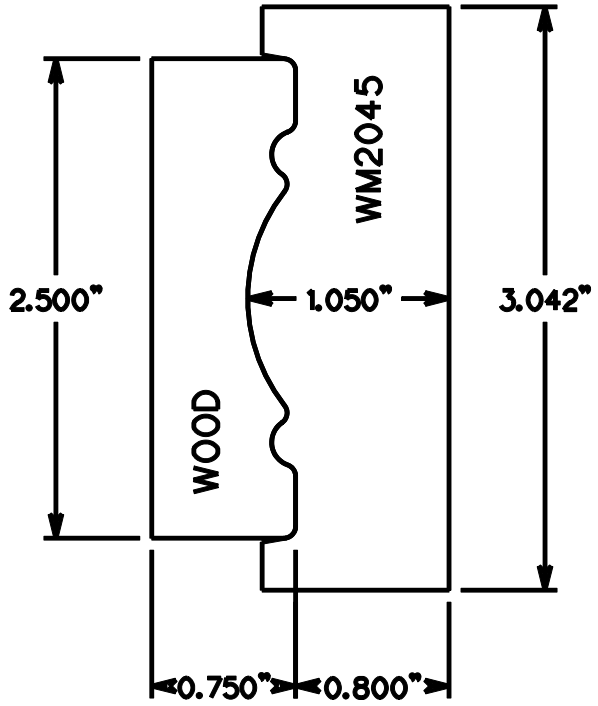

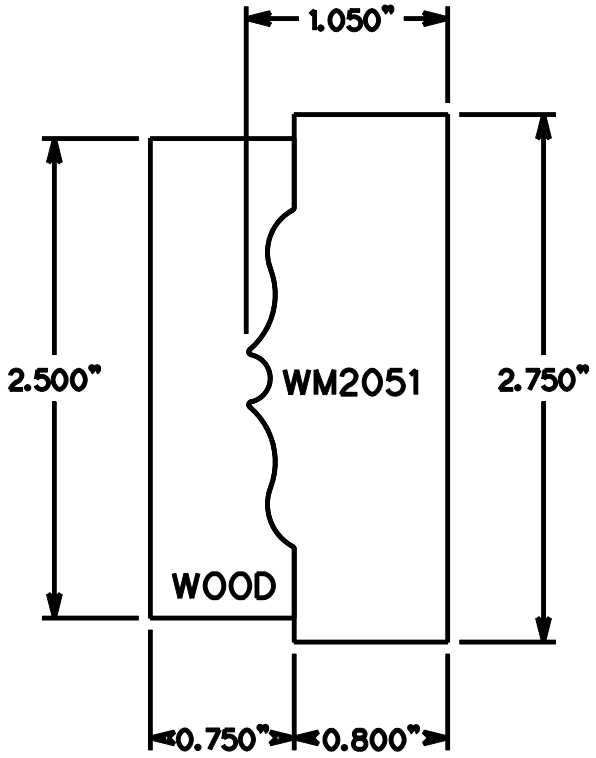

©2011 WWW.MOLDINGKNIVES.COM

CASINGS

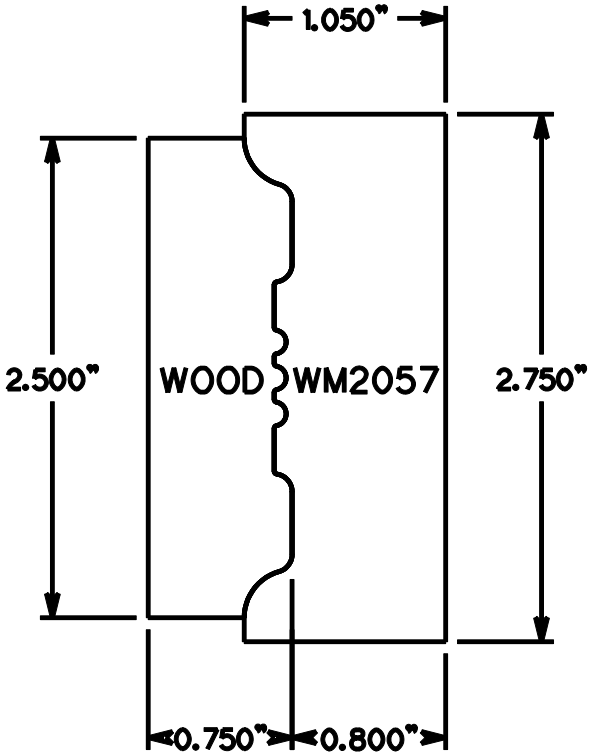

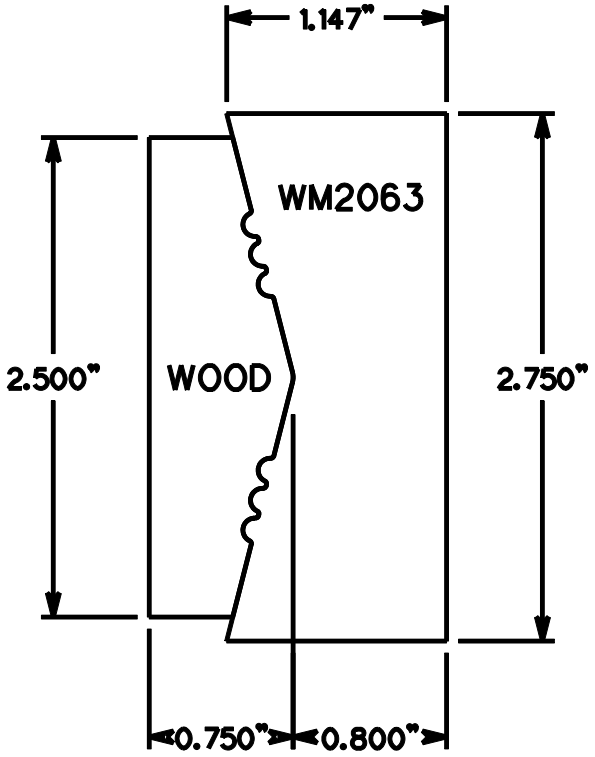

©2011 WWW.MOLDINGKNIVES.COM

CASINGS

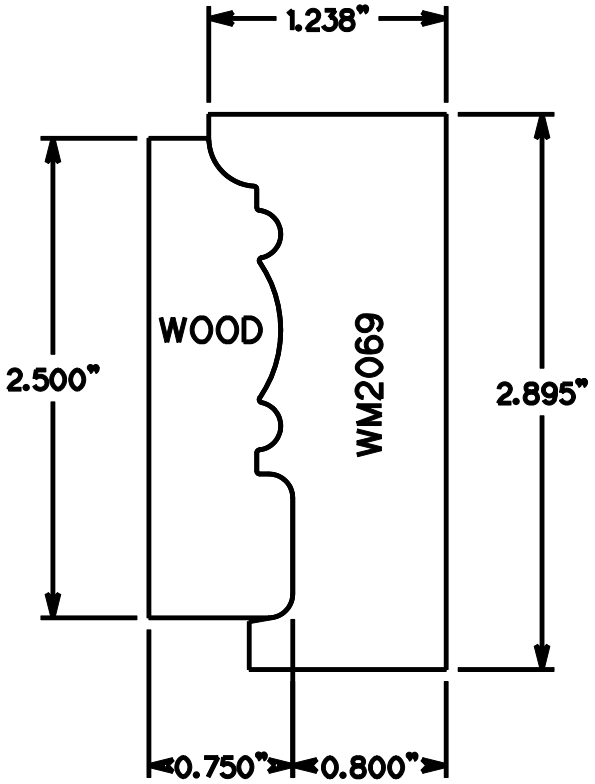

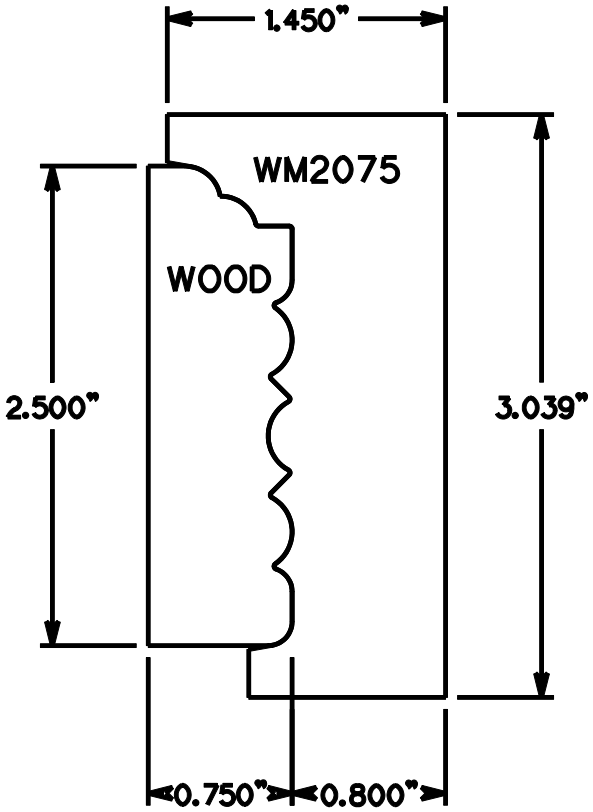

©2011 WWW.MOLDINGKNIVES.COM

CASINGS

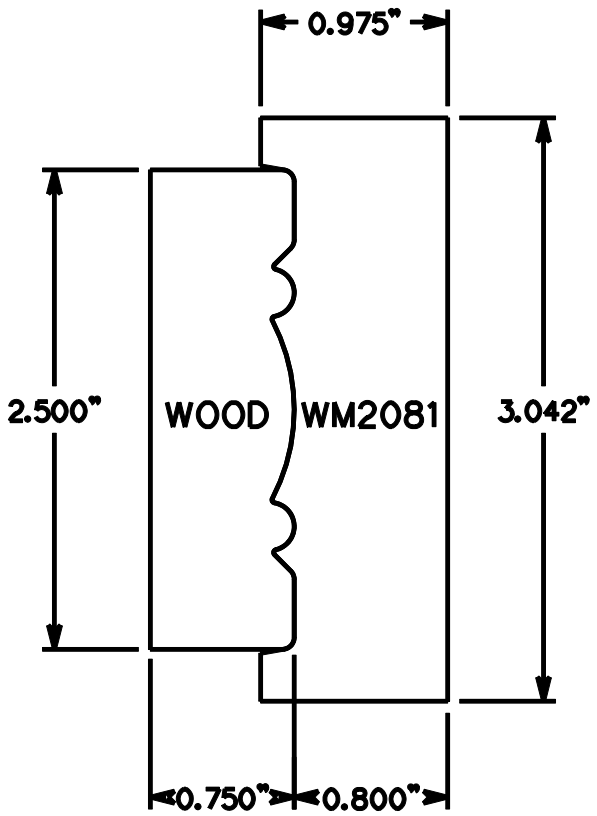

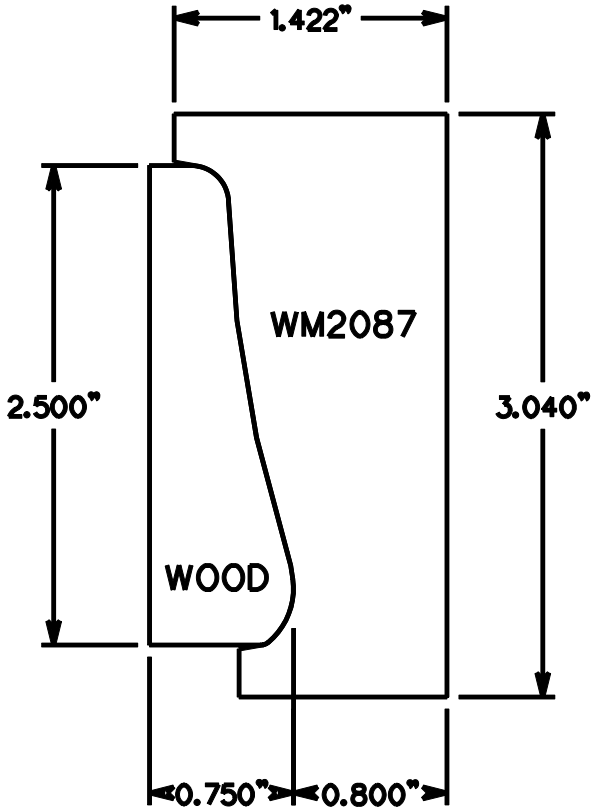

©2011 WWW.MOLDINGKNIVES.COM

CASINGS

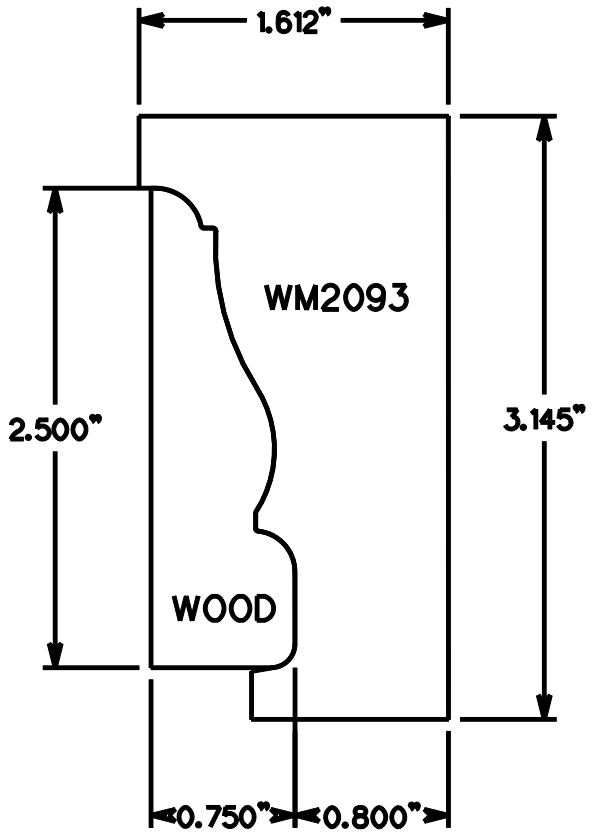

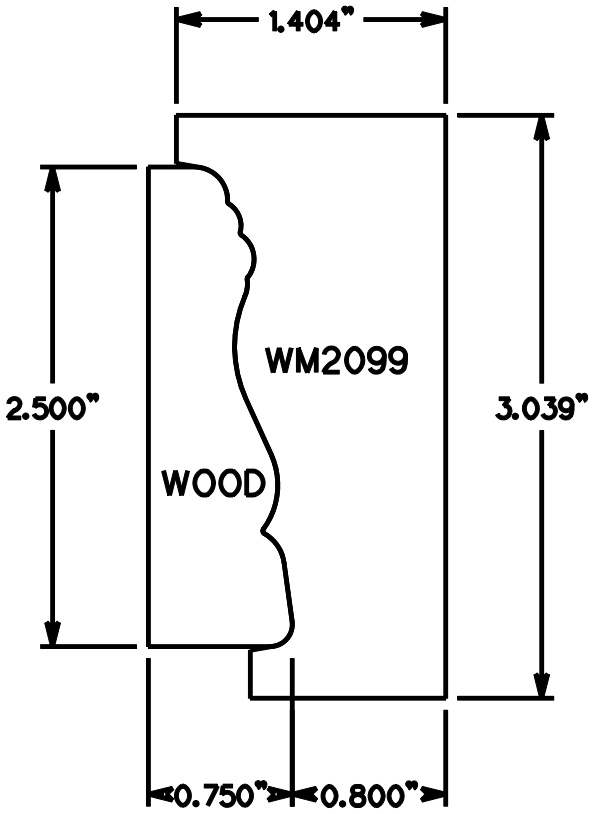

©2011 WWW.MOLDINGKNIVES.COM